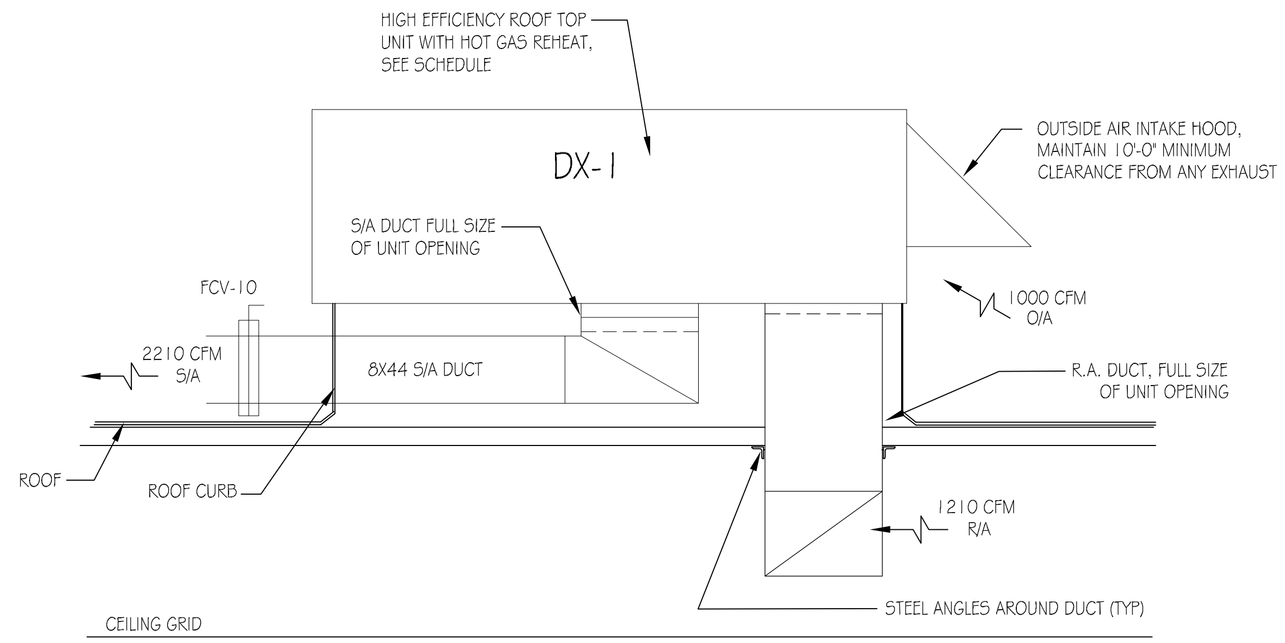

DX-1 DETAIL (A / M1 M2)
N.T.S.

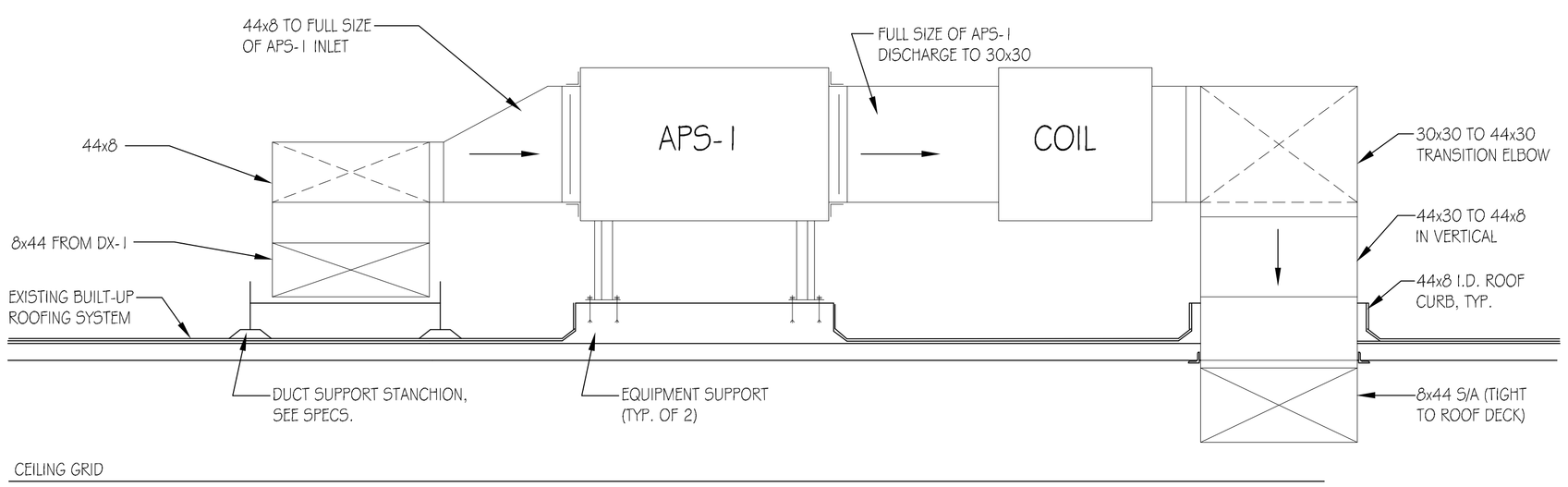

APS-1 DETAIL (B / M1 M2)
N.T.S.

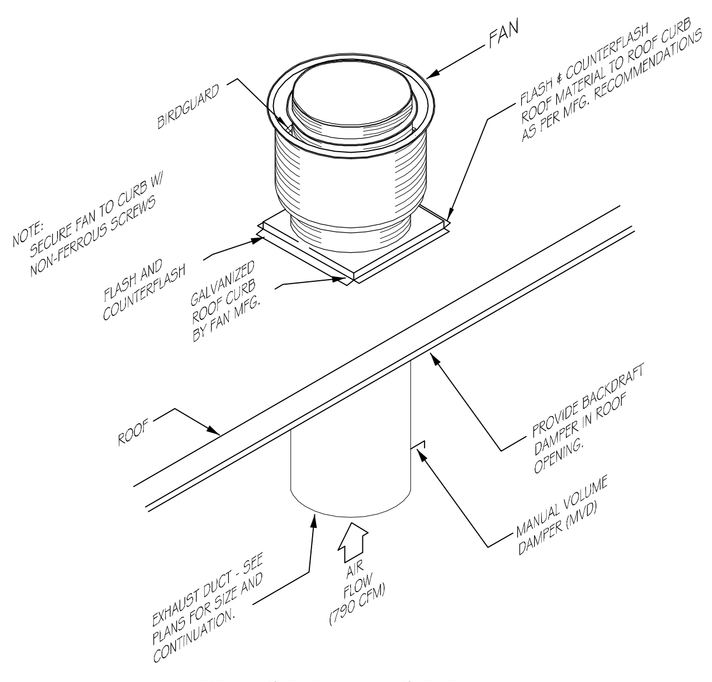

UPBLAST EXHAUST FAN FOR HOOD UNIT #1 (C / M1 M2)
NTS

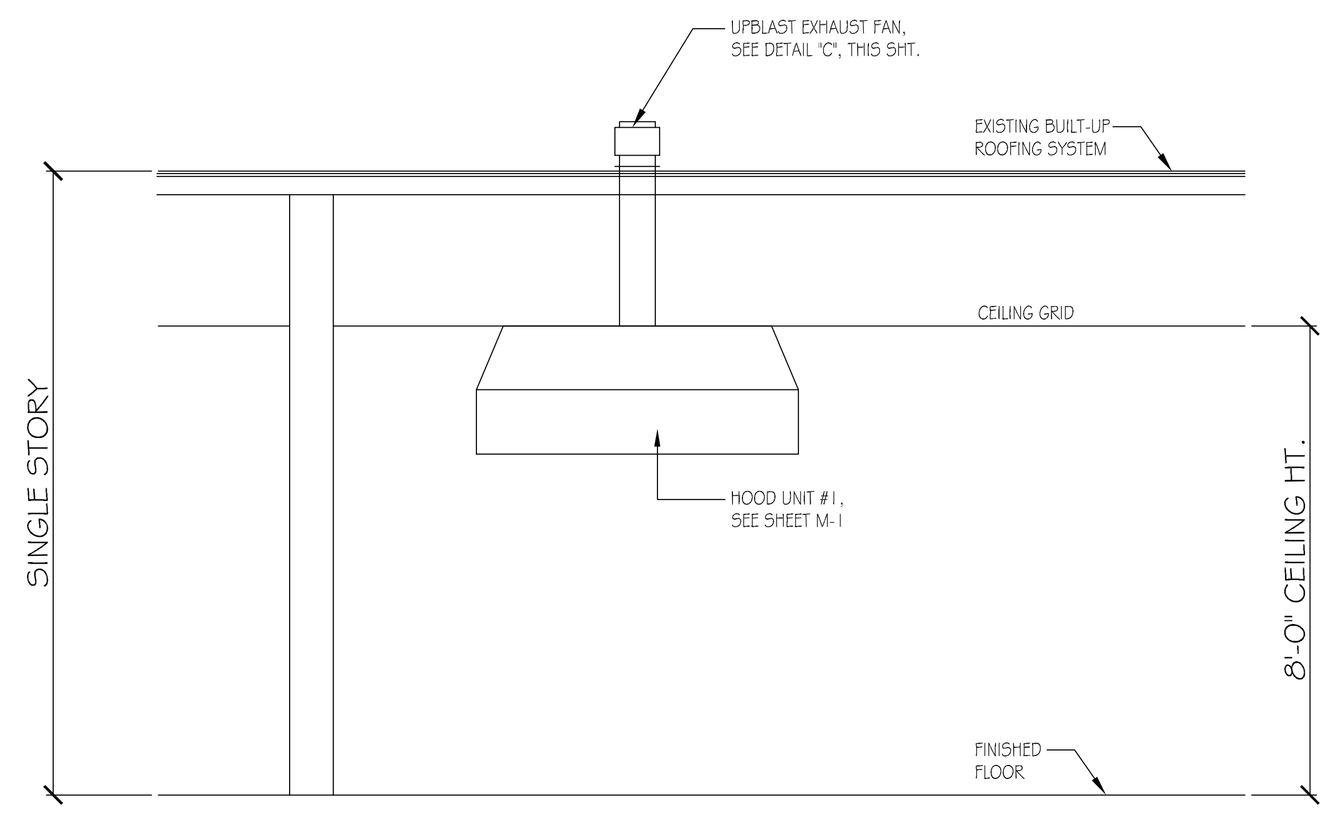

HOOD UNIT #1 EXHAUST TO ROOF (D / M1 M2)
NTS

DAMMON
ENGINEERING, INC.

CHIEF ENGINEER
EMMETT
DAMMON, P.E.

CHIEF ARCHITECT
ROBERT
WILTSE

1095 FLORIDA AVENUE
SLIDELL, LA. 70458
OFFICE: 985-649-5832
FAX: 985-641-5950

WEBSITE:
WWW.DAMMONENGINEERING.COM

EMAIL:
DAMMONENG@BELLSOUTH.NET

ARCHITECTURE

ENGINEERING

STUDIES

PLANNING

INVESTIGATION

EXPERT WITNESS

SLIDELL
MEMORIAL
HOSPITAL
1001 GAUSE BLVD.
SLIDELL, LA

MECHANICAL
SCHEDULES
AND
DETAILS

REV: 7-2-10

SCALE: AS NOTED

JOB#: 2063

DATE: 06-02-10

SHEET 6

M-2

OF 11