ROZAS·WARD\a.i.a. architects
a professional corporation
1010 Common Street · Suite 2760 · New Orleans · Louisiana 70112 · (504)524-4375

AS-BUILT DWG.
Gibbs Construction

Medical Office Building
Slidell, Louisiana

Date:	APRIL 24, 2002
Drawn By:	KMK
Checked By:	DMR
Revisions:	
Project Number:	00015

This drawing is the property of ROZAS·WARD and shall not be used, in whole or in part, for any other project and date specifically identified herein.

Stamps as stated hereon are valid on the original drawing only.

A4.2
drawing building sections
set no.

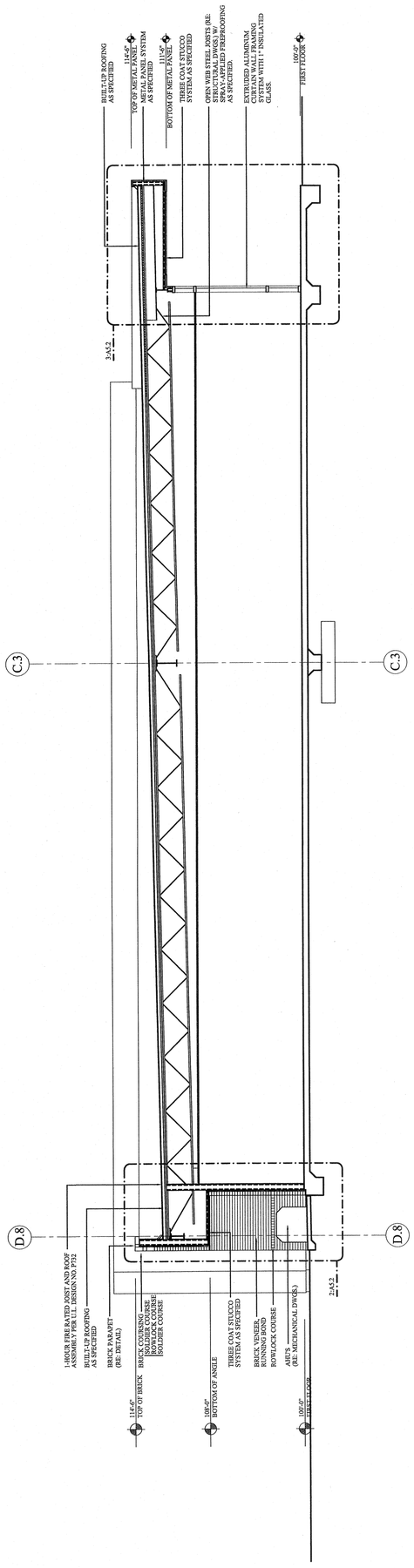

1 A4.2 BUILDING SECTION
SCALE: 3/16" = 1'-0"

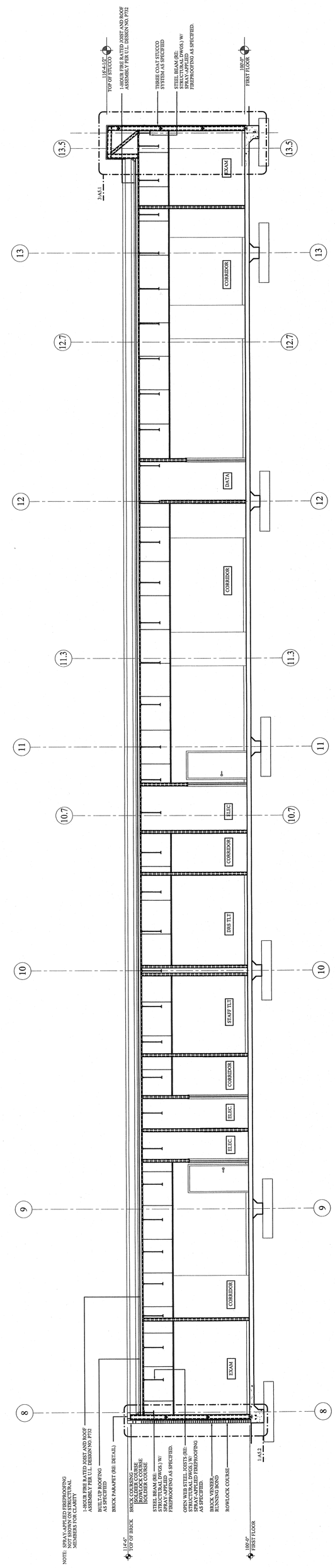

2 A4.2 BUILDING SECTION
SCALE: 3/16" = 1'-0"