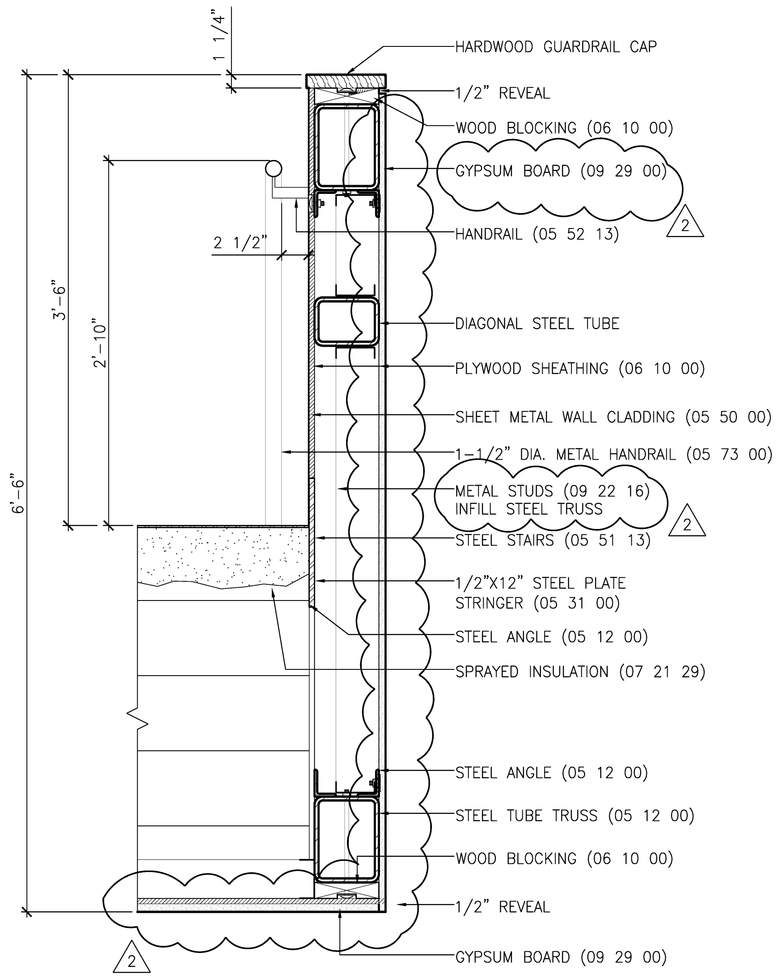

8 SECTION
6.3 7.2 AT STAIR NO 2 1-1/2" = 1'-0"

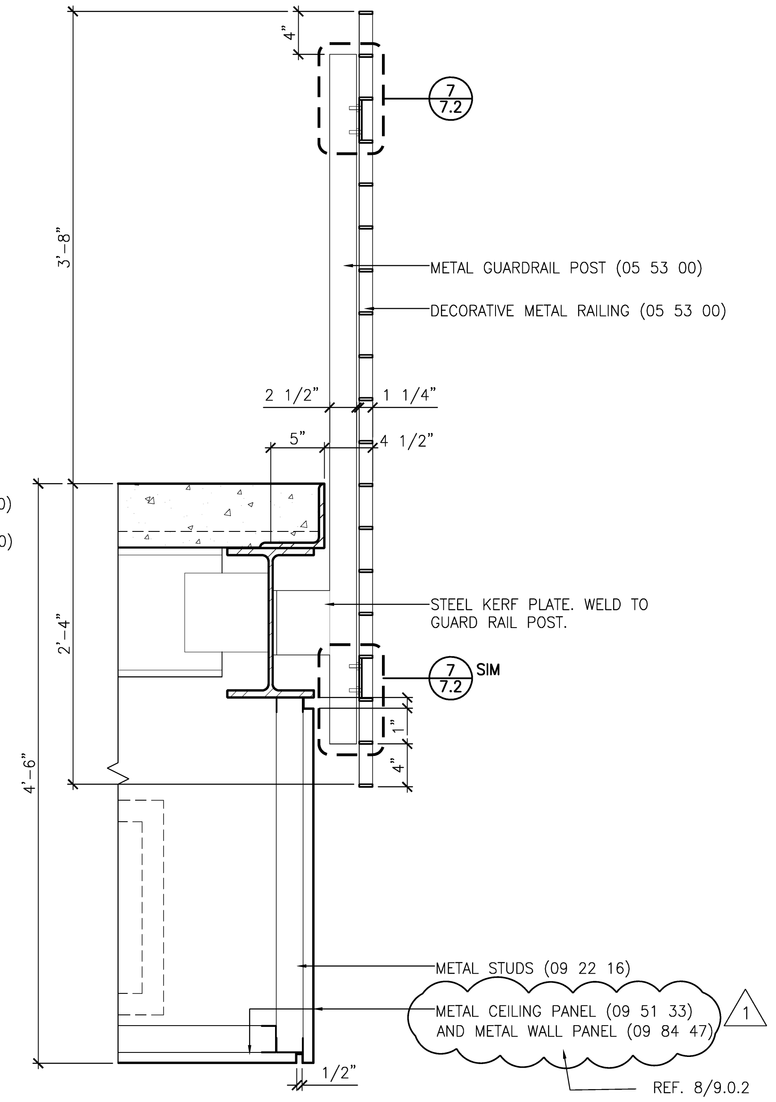

6 SECTION
7.2 7.2 AT STAIR NO 2 1-1/2" = 1'-0"

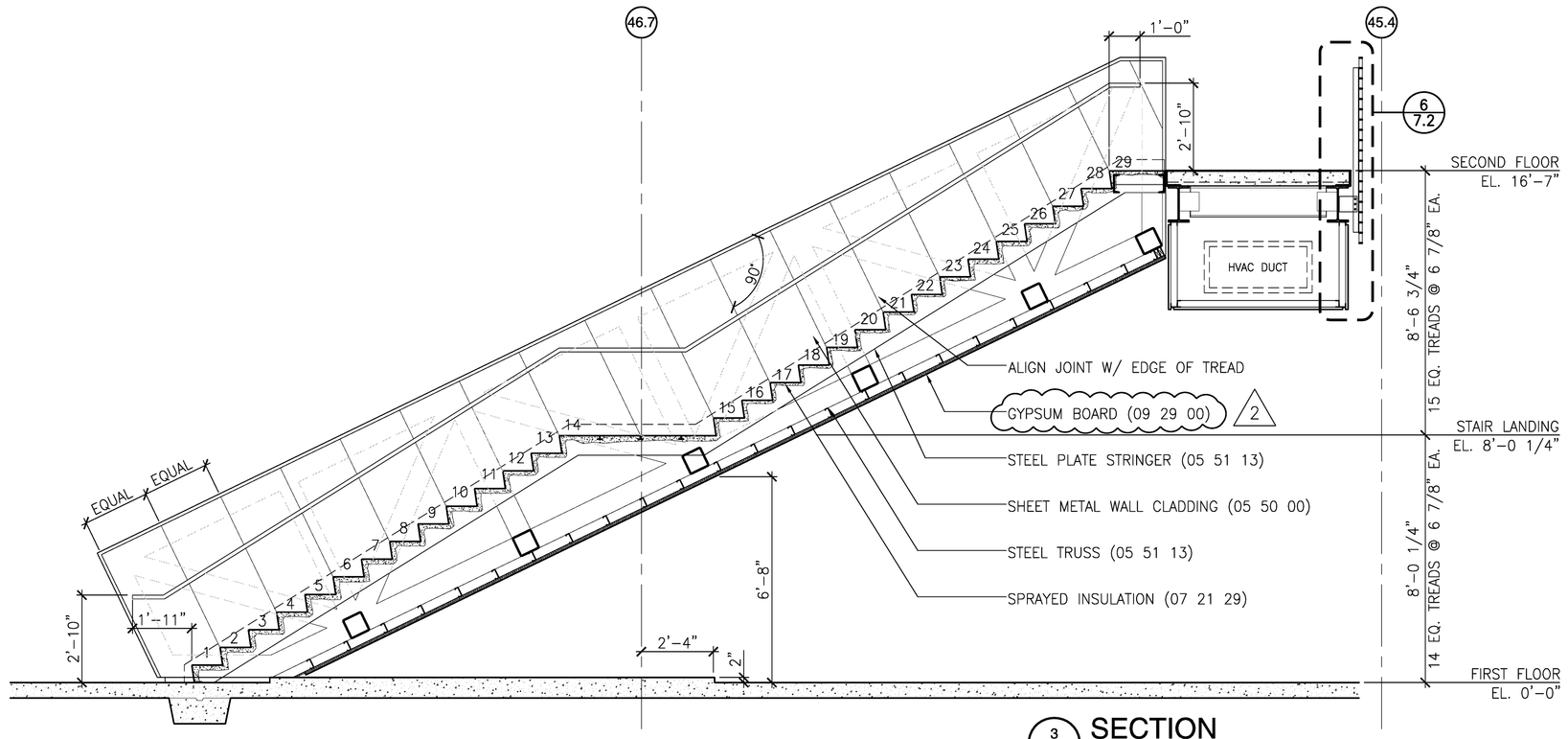

3 SECTION
7.2 7.2 AT STAIR NO 2 3/8" = 1'-0"

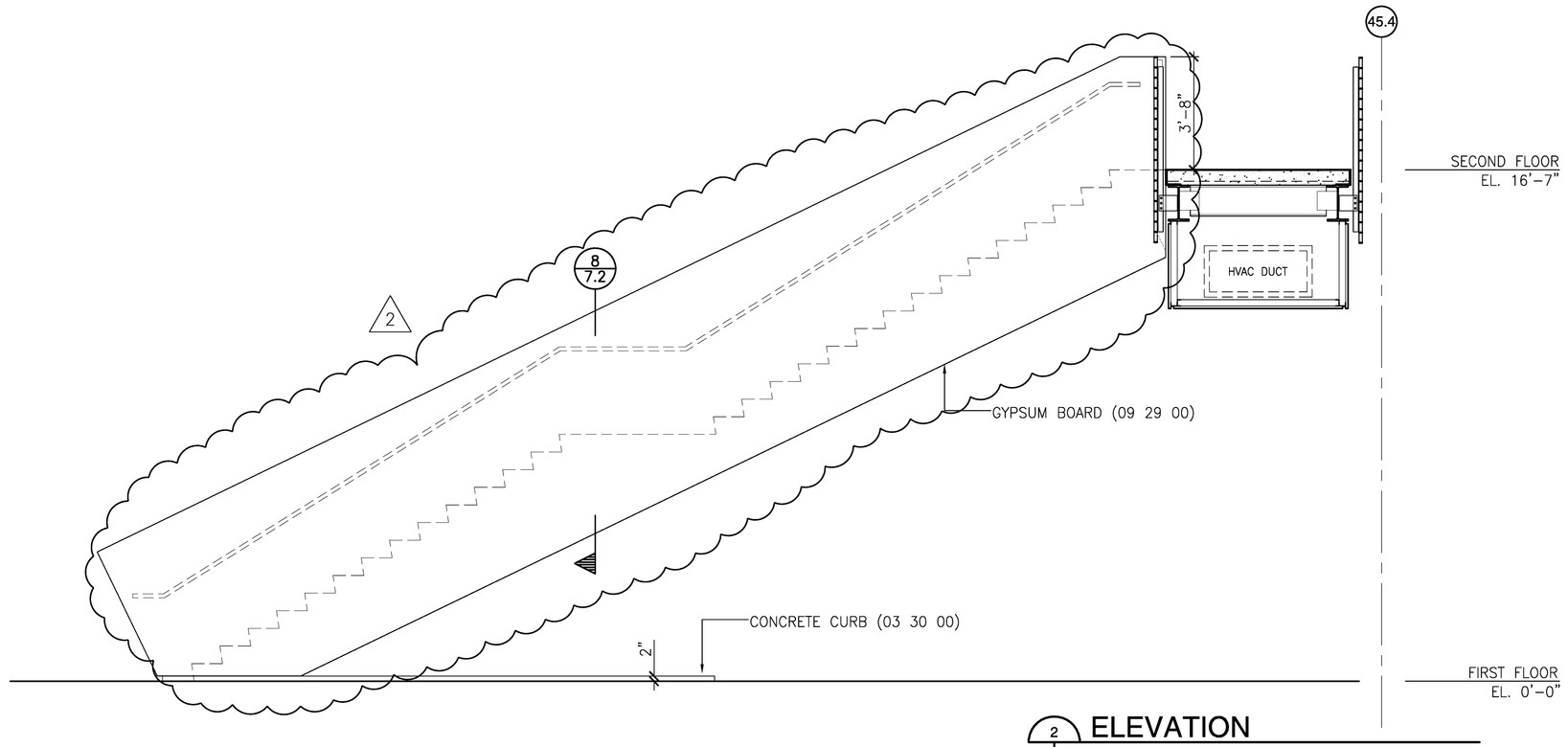

2 ELEVATION
7.2 7.2 AT STAIR NO 2 3/8" = 1'-0"

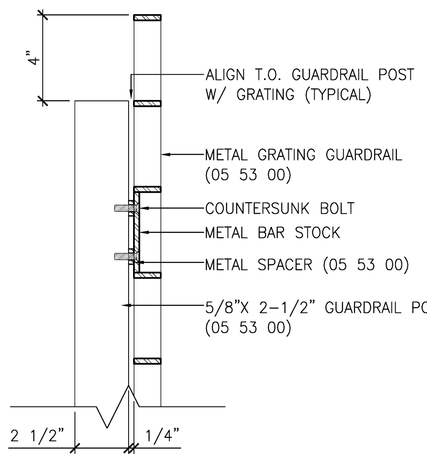

7 SECTION
7.2 7.2 AT GUARDRAIL POST 3" = 1'-0"

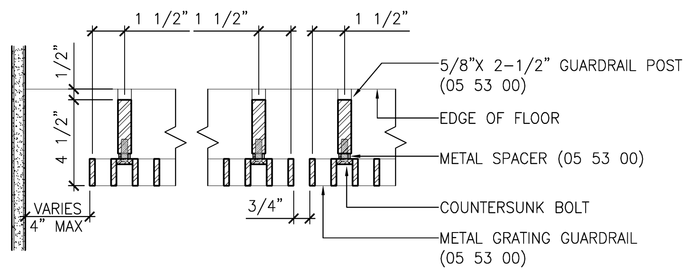

5 HORIZONTAL SECTION
7.2 7.2 AT GUARDRAIL POST 3" = 1'-0"

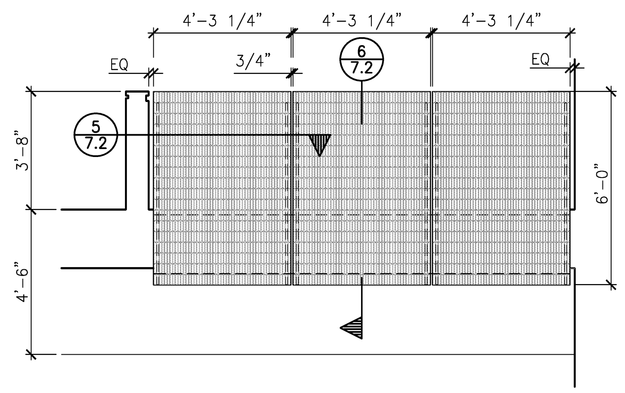

4 ELEVATION
7.2 7.2 AT GUARDRAIL 3/8" = 1'-0"

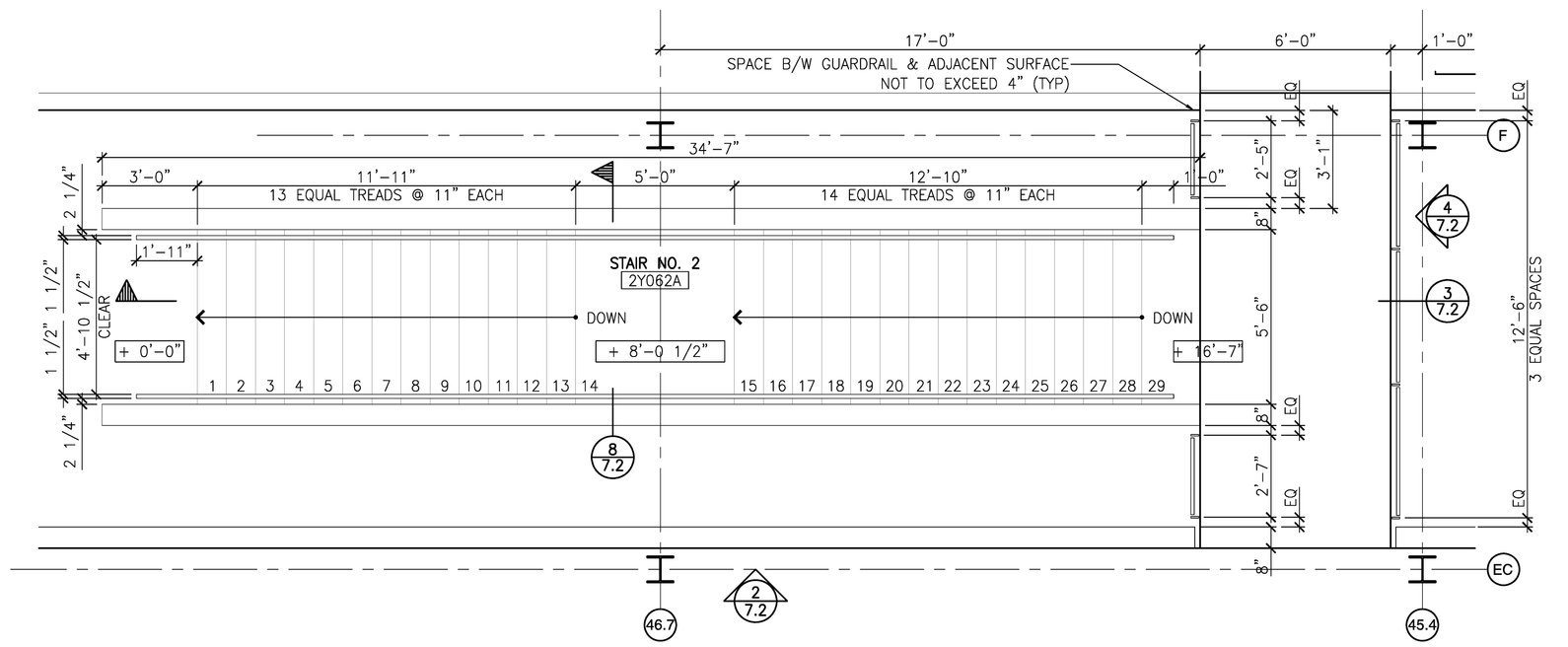

1 SECOND FLOOR PLAN
2.10 7.2 AT STAIR NO 2 3/8" = 1'-0"

EDR
ESKEW+DUMEZ+RIPPLE
365 Canal Street, Suite 3150
New Orleans, LA 70130
T 504.561.8686
F 504.522.2253

RW
ROZAS+WARD
1100 Poydras Street, Suite 3550
New Orleans, LA 70163
T 504.524.4375
F 504.524.2493

THE ABOVE DRAWINGS AND SPECIFICATIONS AND IDEAS, DESIGNS, AND ARRANGEMENTS REPRESENTED THEREBY ARE AND SHALL REMAIN THE PROPERTY OF THE ARCHITECT, AND NO PART THEREOF SHALL BE COPIED, DISCLOSED TO OTHERS OR USED IN CONNECTION WITH ANY WORK OR PROJECT OTHER THAN THE SPECIFIC PROJECT FOR WHICH THEY HAVE BEEN PREPARED AND DEVELOPED WITHOUT THE WRITTEN CONSENT OF THE ARCHITECT. VISUAL CONTACT WITH THESE DRAWINGS OR SPECIFICATIONS SHALL CONSTITUTE CONCLUSIVE EVIDENCE OF ACCEPTANCE OF THESE RESTRICTIONS.
WRITTEN DIMENSIONS ON THESE DRAWINGS SHALL HAVE PRECEDENCE OVER SCALED DIMENSIONS; CONTRACTORS SHALL VERIFY, AND BE RESPONSIBLE FOR, ALL DIMENSIONS AND CONDITIONS ON THE JOB AND THIS OFFICE MUST BE NOTIFIED OF ANY VARIATIONS FROM THE DIMENSIONS AND CONDITIONS SHOWN BY THESE DRAWINGS. SHOP DETAILS MUST BE SUBMITTED TO THIS OFFICE FOR APPROVAL BEFORE PROCEEDING WITH FABRICATION.

OCHSNER
NORTH CAMPUS
INTERNAL
MEDICINE
RELOCATION

OCHSNER MEDICAL CENTER

1401 Jefferson Highway
Jefferson, LA 70121

Copyright © 2010
Eskew+Dumez+Ripple /
Rozas-Ward, Joint Venture

Date:	16 DECEMBER 2010	
1	Addn # 6	21 JAN 2011
2	V.E.	16 MAY 2011

MARK J. RIPPLE
REG. NO. 3454
STATE OF LOUISIANA
REGISTERED ARCHITECT

DARREN M. ROZAS
4184
STATE OF LOUISIANA
REGISTERED ARCHITECT

STAIR DETAILS	
EDR No. 09023	
RWA No. 09024	
drawn:	MCELVEEN
checked:	RIPPLE
approved:	RIPPLE
sheet:	

7.2

P:\2009_Projects\09023_Ochsner North Campus\PHASE 2 - Internal Medicine\Drawings\07Stairs\0702_StairDetails.dwg
15 May 11 - 5:16pm