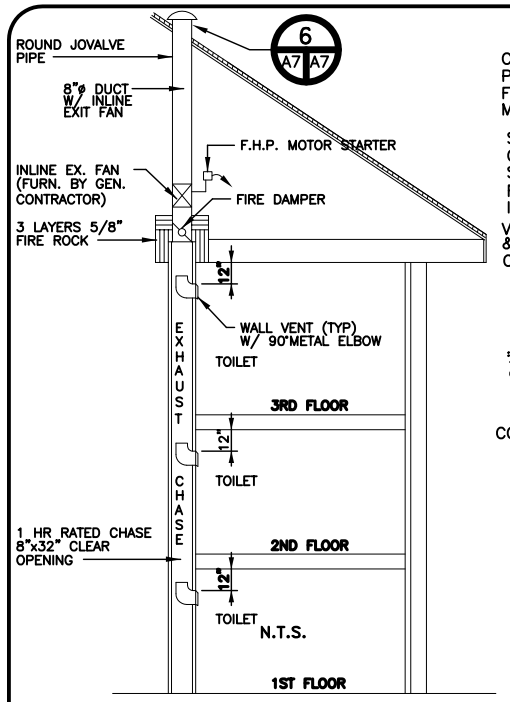

SECTION LL
NOT TO SCALE A7 A3

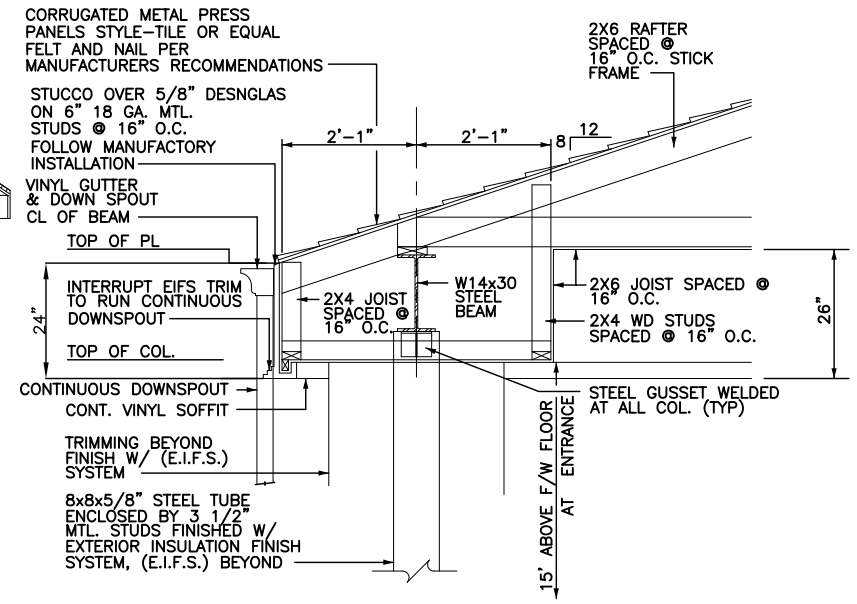

EAVE DETAIL @ PORTE COCHERE
NOT TO SCALE

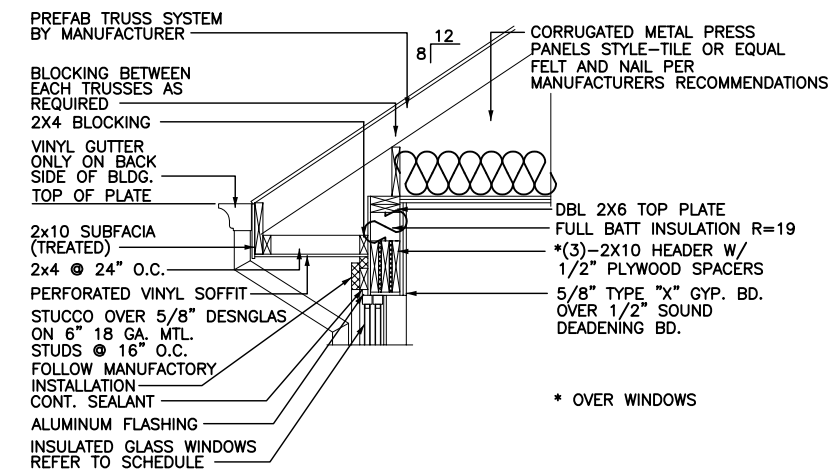

EAVE DETAIL (TYP.)
NOT TO SCALE

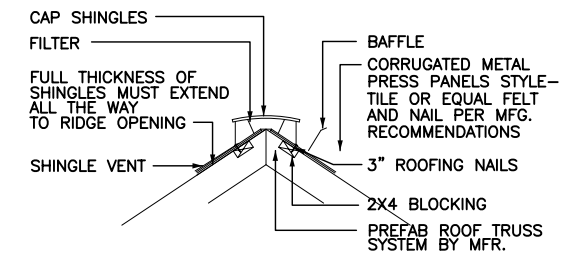

RIDGE VENT DETAIL
NOT TO SCALE

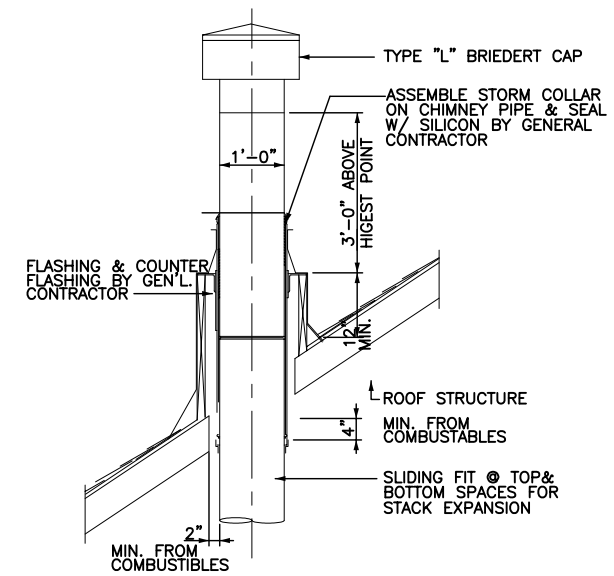

EAVE DETAIL @ CANOPY
(HOT WATER HEATER EXH.)
NOT TO SCALE

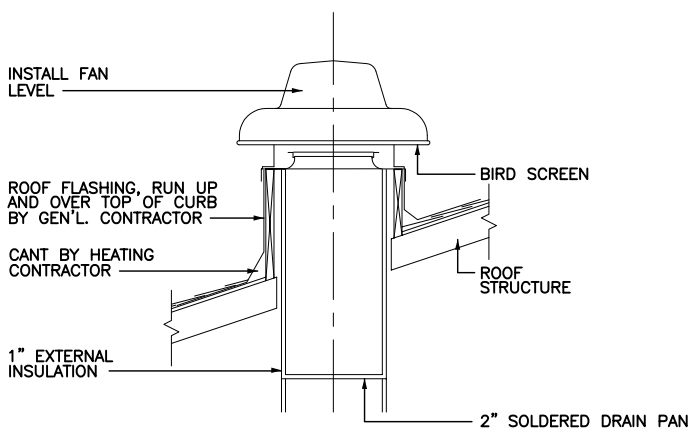

EXHAUST FAN DETAIL 6 A7 A7
NOT TO SCALE

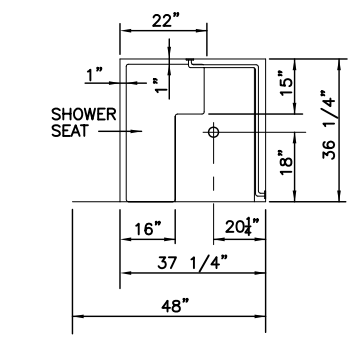

HDCP SHOWER PLAN VIEW
NOT TO SCALE

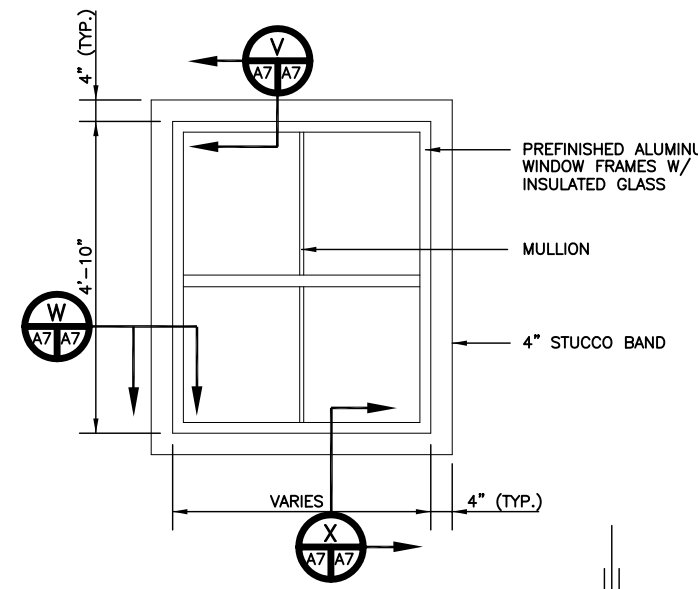

TYPICAL WINDOW
NOT TO SCALE

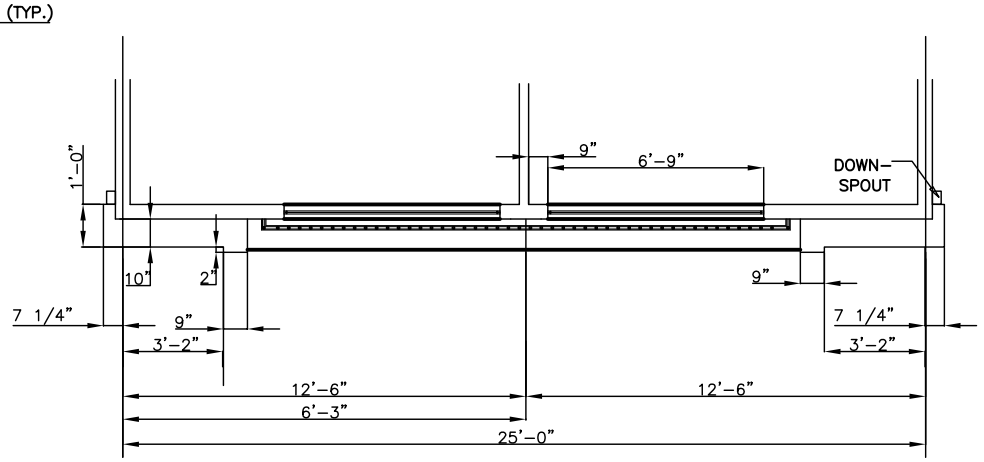

ENLARGED PEDIMENT PLAN MM A7 A1
SCALE: 3/8" = 1'-0"

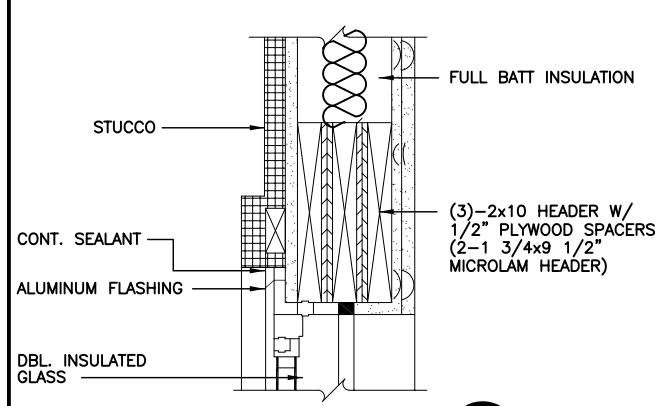

TYPICAL HEAD V A7 A7
NOT TO SCALE

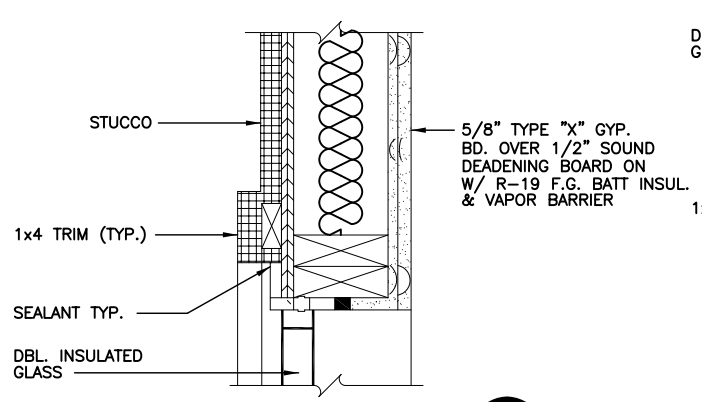

TYPICAL WINDOW JAMB W A7 A7
NOT TO SCALE

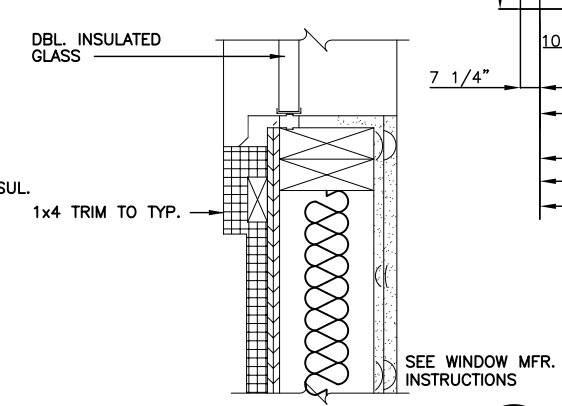

TYPICAL WINDOW SILL X A7 A7
NOT TO SCALE

REVISED:

DETAILS

DR. EDUARDO HERNANDEZ
CEDAR LAKE ROAD
BILOXI, MISSISSIPPI

LA QUINTA INN & SUITES

DAMMON ENGINEERING. INC.
1095 FLORIDA AVENUE 985-649-5832 SLIDELL, LA. 70458
DAMMONENGINEERING.COM

SCALE: 3/4"=1'
FILE:
JOB NO. 1694
DATE:11-01-05
SHEET
A-7
OF