FIXTURES, FURNITURE, AND EQUIPMENT SCHEDULE

X-001/C1	GUEST ROOM CARPET
X-001A/C1A	GUEST ROOM CARPET PAD
X-001B/C1B	GUEST ROOM CARPET BASE
X-002-/C2	CORRIDOR SPACE CARPET
X-002A/C2A	CORRIDOR SPACE CARPET PAD
X-002B/C2B	CORRIDOR SPACE CARPET BASE
X-003/C3	LOBBY CARPET
X-003A/C3A	LOBBY CARPET PAD
X-004/C4	EXERCISE ROOM CARPET
X-004B/C4B	EXERCISE ROOM BASE
X-005/C5	PUBLIC SPACE CARPET
X-005B/C5B	PUBLIC SPACE CARPET BASE
X-100	GUEST ROOM DRAPERY INCLUDING CORNICE, SIDE PANEL AND OVER DRAPERY W/ BLACKOUT
X-100A	GUEST ROOM DRAPERY HARDWARE
X-101K	COMFORTER KING
X-101AK	MATTRESS, BOXSPRING KING
X-101AKB	MATTRESS, BOX SPRING KING BASE
X-101KR	DUST RUFFLE-KING
X-101D	COMFORTER DOUBLE
X-101AD	MATTRESS BOXSPRING, FRAME DOUBLE
X-101ADB	MATTRESS BOXSPRING, DOUBLE BASE
X-101DR	DUST RUFFLE-DOUBLE
X-101KHC	ADA MATTRESS BOXSPRING, KING
X-101KHCF	ADA MATTRESS BOX SPRING, KING, FRAME WITH CASTERS
X-101DHC	ADA MATTRESS BOX SPRING, DOUBLE
X-101DHCF	ADA MATTRESS BOX SPRING, DOUBLE, FRAME WITH CASTERS
X-102	SHOWER CURTAIN
X-103	SHEER CURTAIN FOR CONNECTING DOOR & SIDE PANEL IN TWO WAY BAY SUITE, BUSINESS CENTER, CORRIDOR WINDOWS
X-104	LOBBY & BREAKFAST DRAPERY
X-104A	SHEER DRAPERY
X-105	MEETING ROOM & BOARD ROOM DRAPERY, ET AL
X-105A	MEETING ROOM & BOARD ROOM DRAPERY HARDWARE
X-106	NOT USED
X-107	NOT USED
X-200	DRESSER 60"
X-201D	DOUBLE HEADBOARD
X-201DA	DOUBLE HEADBOARD ARCHED
X-201K	KING HEADBOARD
X-201KA	KING HEADBOARD ARCH
X-202	NIGHT STAND
X-203	NIGHT STAND – REDUCED SIZE
X-204	RECTANGULAR DESK – 48"
X-205	DESK CHAIR W/ ARMS, W/CASTERS
X-206	DRESSER 72"
X-207	FRAMED MIRROR
X-207A	FRAMED MIRROR ARCH
X-208	BREAKFAST ROOM CHAIR W/ ARMS
X-209	LEATHER HIBACK EXECUTIVE DESK CHAIR
X-210	LOUNGE CHAIR
X-211	RECLINER CHAIR
X-212	STRAIGHT BACK DESK CHAIR W/O ARMS
X-213L	P–TOP DESK 42" DIA X 66" L – LEFT
X-213R	P–TOP DESK 42" DIA X 66" L – RIGHT
X-214	LOVE SEAT SLEEPER
X-215	COFFEE TABLE
X-216	END TABLE
X-217	ROUND TABLE 24" DIA
X-218	MICRO–FRIDGE CABINET
X-219	SOFA SLEEPER
X-220	THREE DRAWER DRESSER
X-221	TWO BAY SUITE UPHOLSTERED BENCH
X-222	KING BARREL CHAIR
X-223	LOBBY SOFA
X-224	LOBBY BARREL CHAIR
X-225	LOBBY END TABLE
X-226	LOBBY COCKTAIL TABLE
X-227	BREAKFAST ROOM CHAIR W/O ARMS
X-228	BREAKFAST ROOM TABLE 30" DIA
X-228A	BREAKFAST ROOM TABLE BASE – 30"
X-229	BREAKFAST ROOM TABLE 24" DIA.
X-229A	BREAKFAST ROOM TABLE BASE – 24"
X-230	BREAKFAST AREA LOVE SEAT
X-231	OVERFLOW BREAKFAST TABLE 30"X30"
X-231A	OVERFLOW BREAKFAST TABLE BASE 30"X30"
X-232	SOFA TABLE
X-233	DECORATIVE MIRROR
X-234	MEETING ROOM PRESENTATION CABINET
X-235	BOARD ROOM TABLE
X-236	BOARD ROOM EXECUTIVE CHAIRS
X-237	EXTERIOR TRASH RECEPTACLE
X-238	EXTERIOR ASH RECEPTACLE
X-239	INTERIOR TRASH RECEPTACLE
X-240	LOBBY BENCH
X-241	OFFICE DESK
X-242	COMPUTER TABLE
X-243	MANAGER'S DESK CHAIR
X-244	WORK ROOM CHAIR
X-245	ARMORE
X-246	SWMG POOL CHAISE LOUNGE CHAIR
X-247	SWMG POOL TABLE 42" DIA. W/UMBRELLA HOLE
X-247A	SWMG POOL UMBRELLA
X-247B	BASE FOR UMBRELLA
X-248	SWMG POOL CHAIR
X-249	SWMG POOL COCKTAIL TABLE
X-250	DESK – 42"
X-251	DECORATIVE NICHE CONSOLE
X-252	DECORATIVE CONSOLE MIRROR
X-253	COURTYARD BENCH
X-254	PATIO DINING CHAIR
X-255	LOBBY ROUND TABLE
X-256	PATIO TABLE 36" DIA. W/UMBRELLA HOLE
X-257	NOT USED
X-258	NOT USED
X-259	EXTERIOR PLANTER 24" DIA. X 18" H
X-260	EXTERIOR PLANTER 36" DIA X 24" H
X-261	SIDE CHAIR W/ARMS
X-262L	P–TOP DESK 36" DIA. X 60" L – LEFT
X-262R	P–TOP DESK 36" DIA. X 60" L – RIGHT
X-263	INDOOR SWIMMING POOL CHAIR
X-264	INDOOR SWIMMING POOL TABLE 36" DIA.
X-264A	INDOOR SWIMMING POOL TABLE 36" DIA.
X-265	INDOOR SWIMMING POOL TABLE 24" DIA.
X-265A	INDOOR SWIMMING POOL TABLE 24" DIA.
X-300	SUITE TABLE LAMPS
X-301	SUITE TABLE LAMPS
X-302	LOBBY TABLE LAMPS
X-303	LOBBY TABLE LAMPS
X-304	NOT USED
X-305	NOT USED
X-306	LOBBY TORCHIERE
X-400	GUEST ROOM ENTRY WALL SCONCE
X-401	GUEST BATHROOM CEILING LIGHT
X-402	GUEST BATHROOM AND PUBLIC TOILET VANITY LIGHT
X-403	SINGLE HEAD WALL SCONCE
X-404	DOUBLE HEAD WALL SCONCE
X-405	FLOOR LAMP WITH GLASS TRAY
X-406	GUEST BATHROOM VANITY LIGHT REDUCED LENGTH H/C
X-407	CORRIDOR CEILING MOUNTED LIGHT
X-408	CORRIDOR WALL SCONCE
X-409	LOBBY AND ELEV. LOBBY WALL SCONCE
X-410	LOBBY WALL SCONCE
X-411	MEETING ROOM AND BOARD ROOM WALL SCONCE
X-412	BOARD ROOM HANGING LAMP
X-413	LOBBY HANGING LAMP
X-414	EL LOBBY & BRKFST RM SURFACE MTD CLG LIGHT
X-415	EXTERIOR WALL SCONCE
X-416	SWMG POOL EXT. POST LAMP
X-416A	POST FOR SWIMMING POOL LAMP
X-417	MEETING ROOM SURFACE MTD CLG LT. 48"X48"
X-418	MEETING RM ASSEMBLY AND UPPER FLOOR ELEV LOBBY WALL SCONCE
X-419	MAIN LOBBY HANGING LAMP (OPTION FOR TWO STORY LOBBY)
X-420	BUSINESS CENTER SURFACE MOUNTED CEILING FIXTURE 24"X24"
X-421	GUEST ROOM ENTRY SURFACE MTD CLG FIXTURE
X-422	WALL SCONCE AT LOBBY BULKHEAD
X-423	STAIRWELL WALL SCONCE
X-424	CORRIDOR WALL SCONCE
X-425	NOT USED
X-426	MEETING ROOM & OVERFLOW MEETING ROOM CEILING LIGHT
X-500	GUEST ROOM ARTWORK
X-501	GUEST ROOM ARTWORK
X-502	GUEST ROOM ARTWORK
X-503	GUEST ROOM ARTWORK
X-504	NOT USED
X-505	GUEST ROOM ARTWORK
X-506	PUBLIC SPACE ARTWORK
X-507	PUBLIC SPACE ARTWORK
X-508	PUBLIC SPACE ARTWORK
X-509	PUBLIC SPACE ARTWORK
X-510	PUBLIC SPACE ARTWORK
X-511	NOT USED
X-512	PUBLIC SPACE ARTWORK
X-513	PUBLIC SPACE ARTWORK
X-514	SILK FLOWERS / PLANTS
X-515	ARTWORK
X-516	FRONT DESK LOGO – INN & SUITES
X-517	FRONT DESK LOGO – INN
X-518	SILK FLOWER FOR USE AFTER BREAKFAST
X-519	SILK FICUS TREE
X-520	SILK PALM TREE
X-600	TELEVISION 27"
X-600A	TELEVISION SWIVEL MOUNT
X-601	MICROWAVE – GUEST ROOM
X-602	REFRIGERATOR – GUEST ROOM
X-603	COFFEE MAKER
X-604	CLOCK RADIO
X-605	BEDSIDE PHONE
X-606	SPEAKER PHONE
X-607	HAIR DRYER
X-608	TOILET PAPER HOLDER
X-609	SHOWER CURTAIN ROD
X-610	TOWEL BAR
X-611	DECORATIVE TOWEL SHELF
X-612	FACIAL TISSUE DISPENSER
X-613	ROBE HOOK
X-614	32" TELEVISION
X-615	READER BOARD
X-616	EXERCISE EQUIPMENT
X-700A	SUIT HANGER MINI HOOK
X-700B	SKIRT HANGER MINI HOOK
X-701	LUGGAGE RACK
X-702	IRON & IRONING BOARD & HOOK
X-703	PTAC
X-704	PTAC AIR DEFLECTOR
X-705	LUGGAGE CARTS
X-706	SECURITY CAMERA
X-707	SECURITY CAMERA MONITOR
X-708	SECURITY CAMERA SWITCHER
X-708A	SECURITY CAMERA VIDEO CASSETTE RECORDER
X-709	EMPLOYEE LOCKERS
X-710	VCR
X-711	TV CART WITH CASTORS
X-712	SPEAKER PODIUM
X-713	STACK CHAIR CADDY
X-714	PERSONAL COMPUTER
X-715	COPIER/FAX
X-716	HOUSEHOLD REFRIGERATOR – BREAK ROOM
X-717	MEETING ROOM TABLE – 18" X 72"
X-718	MEETING ROOM TABLE 60" DIA.
X-719	MEETING / BREAK ROOM STACK CHAIR
X-720	MEETING ROOM TABLE STACK CADDY
X-721	PLANTER 24"
X-722	PLANTER 36"
X-723	COAT CLOSET ROD
X-724	CONTINENTAL BREAKFAST DISPLAY EQUIPMENT
X-725	OVERHEAD PROJECTOR
X-726	PORTABLE COAT RACK
X-727	50 LB. WASHER – LAUNDRY
X-728	75 LB. DRYER – LAUNDRY
X-729	VENDING ROOM ICE MACHINE
X-730	MICROWAVE – BREAK ROOM
X-731	ROOM ATTENDANT CARTS
X-732	COMMERCIAL REFRIGERATOR – PANTRY
X-733	COMMERCIAL FREEZER – PANTRY
X-734	COMMERCIAL DISHWASHER – PANTRY
X-735	PRESOAK WASHER
X-736	GUEST LAUNDRY WASHER
X-737	GUEST LAUNDRY DRYER
X-738	WOOD BLINDS
X-739	HOUSEKEEPING DESK
X-740	FILE CABINET
X-741	BREAKROOM TABLE
X-742	GUESTROOM DOOR LOCKS
X-743	SAFE
X-744	SAFE DEPOSIT BOXES
X-745	LAUNDRY CARTS

ROOM FINISH SCHEDULE

Room Name	Floor C1	C2	C3	C4	C15	CT1	CT2	CT3	VCT	CONC. PAINTED P5	SEE FINISH PLANS	Base C1B	C2B	C4B	C5B	CT1B	CT2B	CT3B	C15	RB	WOOD BASE	SEE ELEVATIONS	Wall P1A	P1B	P1C	P2A	P2B	P2C	P4A	P5	P6	VA	VB	VC	VD	VE	SEE ELEVATIONS	Ceiling P2A	P2B	P3	ACOUSTICAL TILE	Ceiling Height	Room Finish Notes
STANDARD DOUBLE GUESTROOM	●											●											●			●														●	VARIES	PTN AT WALL PKG AT WALL ABOVE COLUMN MOLDING SEE PLYWM ELEVATION
STANDARD KING GUESTROOM	●											●											●			●														●	VARIES	PTN AT WALL PKG AT WALL ABOVE COLUMN MOLDING
STANDARD KING SOFA GUESTROOM	●											●											●			●														●	VARIES	PTN AT WALL PKG AT WALL ABOVE COLUMN MOLDING
STANDARD ONE–BAY KING SUITE	●											●											●			●														●	VARIES	PTN AT WALL PKG AT WALL ABOVE COLUMN MOLDING
STANDARD TWO–BAY SUITE	●											●											●			●														●	VARIES	PTN AT WALL PKG AT WALL ABOVE COLUMN MOLDING
ACCESSIBLE DOUBLE GUESTROOM	●											●											●			●														●	VARIES	PTN AT WALL PKG AT WALL ABOVE COLUMN MOLDING
ACCESSIBLE KING GUESTROOM	●											●											●			●														●	VARIES	PTN AT WALL PKG AT WALL ABOVE COLUMN MOLDING
GUESTROOM BATHROOM																																									7'–4"	
ACCESSIBLE BATHRM. W/ROLL–IN SHOWER																																									7'–4"	
ENTRY						●											●								●												●				9'–0"	
LUGGAGE CARTS						●											●								●												●				9'–0"	
LUGGAGE						●											●								●												●				9'–0"	
LOBBY			●							●											●															●	●				VARIES	
REGISTRATION DESK																				●																●	●				VARIES	
WORKROOM				●																●												●								●	8'–0"	
GENERAL MANAGER				●																●												●								●	8'–0"	
SALES				●																●												●								●	9'–0"	
TELEPHONE / V.O.D.										●																				●								●		11'–0"	
EMPLOYEE BREAK ROOM									●																								●							●	8'–0"	
LINEN										●										●												●								●	11'–0"	
LAUNDRY										●										●												●								●	11'–0"	
EMPLOYEE TOILET										●										●												●								●	11'–0"	
ELEVATOR EQUIPMENT									●											●												●								●	11'–0"	
MECHANICAL										●										●												●								●	11'–0"	
FIRST FLOOR VENDING																	●														●						●				8'–0"	
BUSINESS CENTER					●										●																●						●				9'–0"	
PERSONAL COMPUTER																				●											●										11'–0"	
MAINTENANCE																				●											●										11'–0"	
EXERCISE				●										●																			●					●				8'–0"	
GUEST LAUNDRY							●											●																				●			8'–0"	
ELECTRICAL																																							●		11'–0"	
PUBLIC TOILET – MEN						●												●																	●		●				8'–0"	
PUBLIC TOILET– WOMEN						●												●															●				●				8'–0"	
BOARD ROOM															●																	●					●				VARIES	
MEETING				●											●																	●					●				VARIES	
BREAKFAST AREA				●													●																				●				VARIES	
PANTRY						●											●														●								●		8'–0"	
JANITOR										●										●											●										11'–0"	
CORRIDOR	●					●															●																●	●			VARIES	
STORAGE									●											●																					11'–0"	
STAIR #1				●										●																									●		8'–0"	
STAIR #2				●										●																									●		VARIES	
VENDING – 2ND FLOOR							●											●														●						●			8'–0"	
LINEN – 2ND FLOOR										●										●												●							●		8'–0"	
STAIR #1				●										●																		●							●		VARIES	
STAIR #2				●										●																		●							●		VARIES	
CORRIDOR – 2ND FLOOR	●												●																			●							●		8'–0"	
VENDING – 3RD FLOOR							●											●														●							●		8'–0"	
LINEN – 3RD FLOOR										●										●												●							●		8'–0"	
STAIR #1				●										●																		●							●		VARIES	
STAIR #2				●										●																		●							●		VARIES	
CORRIDOR – 3RD FLOOR	●												●																			●							●		8'–0"	

NOTES:

1. REFER LQI FINISH SELECTION AND FF&E SPECIFICATION BOOK FOR X–REFERENCED ITEMS DETAILS.
2. REFER LQI PROTOTYPE FINISH SELECTION LIST (PART OF STANDARDS INFORMATION PACKAGE) FOR DETAILS OF THE FINISHES.

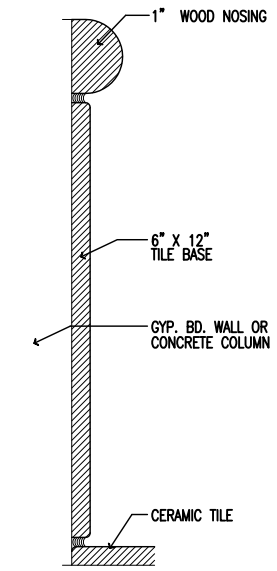

TILE BASE DETAIL 28/A8 A18
NOT TO SCALE

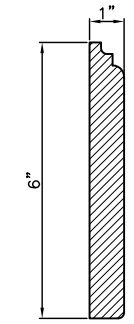

WOOD BASE DETAIL 27/A8 A18
NOT TO SCALE

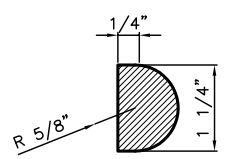

WOOD MOLDING DETAIL
NOT TO SCALE

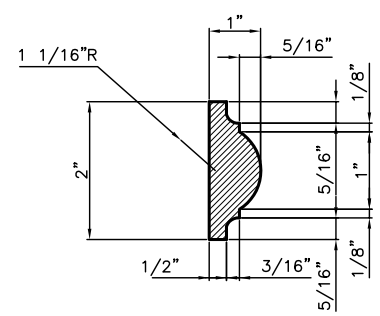

WOOD CHAIR RAIL DETAIL 7/A8 A5
NOT TO SCALE

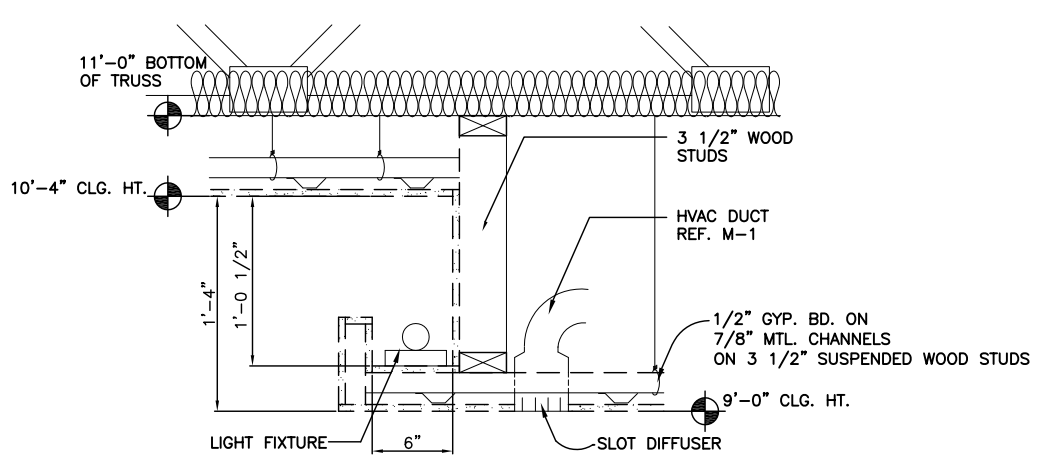

COVE LIGHT DETAIL
NOT TO SCALE

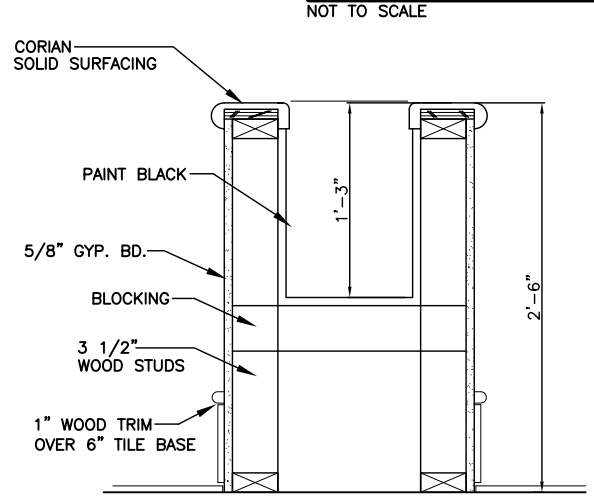

PLANTER SECTION
NOT TO SCALE

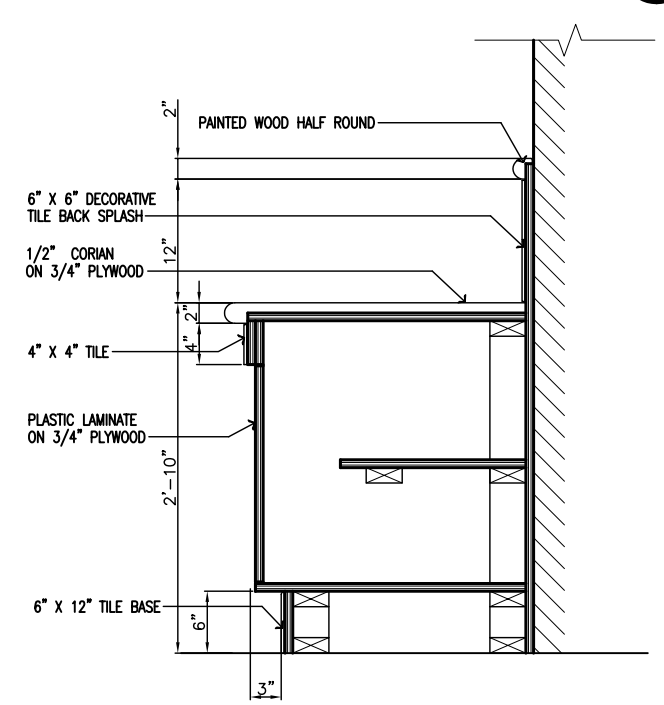

BUFFET SECTION U/A8 A18
NOT TO SCALE

REVISED:

SCHEDULES AND DETAILS

DR. EDUARDO HERNANDEZ
CEDAR LAKE ROAD
BILOXI, MISSISSIPPI

LA QUINTA INN & SUITES

DAMMON ENGINEERING, INC.
1095 FLORIDA AVENUE 985-649-5832 SLIDELL, LA. 70458
DAMMONENGINEERING.COM

SCALE:AS NOTED
FILE:
JOB NO. 1694
DATE:11–01–05
SHEET
A–8
OF