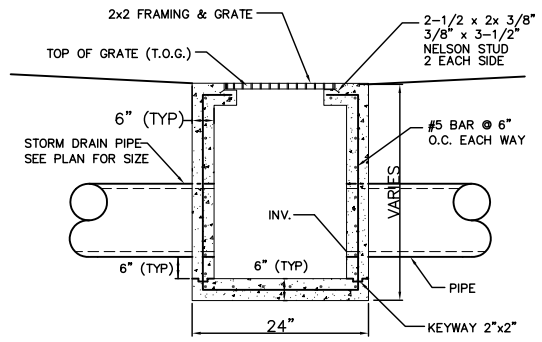

TYPICAL DROP INLET CA
N. T. S.

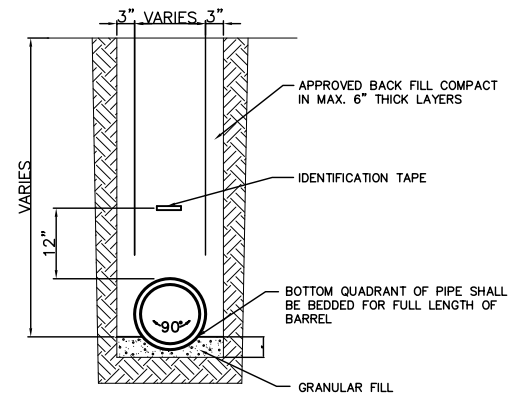

DRAIN PIPE BEDDING CB
N. T. S.

PROJECT:	La Quinta Biloxi			
DRAINAGE RUN OFF CALCULATIONS – RATIONAL METHOD				
PRIOR DEVELOPMENT 10 Year Frequency				
Q_p = CIA				
Watertight Surfaces	c(1) = 0.9	0	sqft =	0.000 Acres
Gravel Surface	c(2) = 0.21	0	sqft =	0.000 Acres
Green Space	c(3) = 0.35	125851	sqft =	2.889 Acres
Summary	c = 0.35	125851	sqft =	2.889 Acres
Duration (D) = Time of concentration (TC)				
TC = .7039(L*.3917)(c*-1.1369)(S^-.1988)				
where	L = 616	Runoff length ft		Elev diff = 2
	c = 0.35	Runoff coef		
	S = 0.3252	Percent Slope		
Therefore	TC = D = 35.70	minutes or		
and from Rainfall Intensity Table	I = 4.60	in/hr		
	Q_p = 4.580 cfs	RUNOFF LIMIT 80%		4.086 cfs
POST DEVELOPMENT 10 Year Frequency				
Q_p = CIA				
Watertight Surfaces	c(1) = 0.9	91027	sqft =	2.090 Acres
Gravel Surface	c(2) = 0.21	0	sqft =	0.000 Acres
Green Space	c(3) = 0.35	34824	sqft =	0.799
Summary	c = 0.75	125851	sqft =	2.889 Acres
D = Time of concentration (TC)				
TC = .7039(L*.3917)(c*-1.1369)(S^-.1988)				
where	L = 476	Runoff length ft		Elev diff = 0.25
	c = 0.75	Runoff coef		
	S = 0.0526	Percent Slope		
Therefore	TC = D = 19.85	minutes or		
and from Rainfall Intensity Table	I = 7.60	in/hr		
	Q_p = 16.420 cfs			
RESULTS				
DETENTION REQUIRED Q_p-Q_1		12.325 cfs		
ONE HOUR DETENTION		44368.8 cuft		
DETENTION DIMENSIONS	WIDTH	197 feet		
	LENGTH	358 feet		
	DEPTH	0.63 feet		
DISCHARGE END AREA CALCULATIONS				
Q = cA(2gH)^1/2	where Q is allowable run off			
Allowable run off	Q =	4.095 cfs		
Friction loss factor	c =	0.58 coefficient		
Acceleration	g =	32.2 ft/ft/sec		
Height above invert	H =	2.75 feet		
End area	A =	0.31 sqft		
REQUIRED CONDUIT =		7.58 inch diameter		

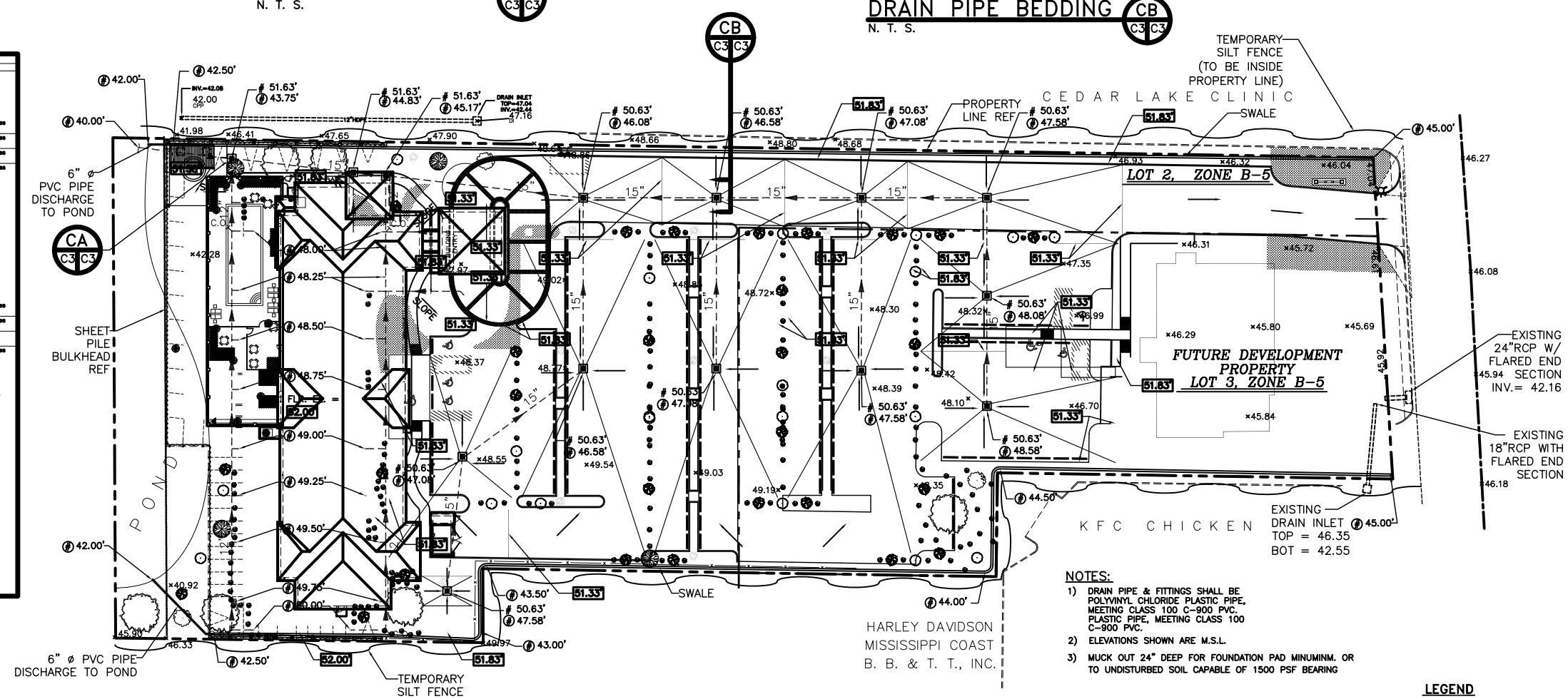

DRAINAGE PLAN
SCALE: 1"=30'-0"

NOTES:
1) DRAIN PIPE & FITTINGS SHALL BE POLYVINYL CHLORIDE PLASTIC PIPE, MEETING CLASS 100 C-900 PVC. PLASTIC PIPE, MEETING CLASS 100 C-900 PVC.
2) ELEVATIONS SHOWN ARE M.S.L.
3) MUCK OUT 24" DEEP FOR FOUNDATION PAD MINUMINM. OR TO UNDISTURBED SOIL CAPABLE OF 1500 PSF BEARING

NOTE:
SILT FENCE DRAWN DIAGRAMMATICALLY AND SHALL BE CONSTRUCTED INSIDE PROPERTY LINE.

APPLEBEE'S PARKING
4928 S.F. @ 67 ROOMS, 69 PARKING SPACES REQUIRED
29 PARKING SPACES REQUIRED
PER BILOXI L.D.O., SEC. 23-15-2
PG. 280

PER BILOXI L.D.O., SEC. 23-15-2
PG. 281

DRAINAGE
1. CONCRETE STRENGTH TO BE 4,000 P.S.I. (MIN.) @ 28 DAYS.
2. WHEN BOX IS 7'-0" OR LESS IN HEIGHT USE ONE LAYER OF BRICK. WHEN BOX IS 7'-0" BUT LESS THAN 12'-0" USE TWO LAYERS OF BRICK.
3. ALL MASONRY TO BE LAID WITH RUNNING BOND AND HEADER COURSE (EVERY FOURTH LAYER).
4. ALL WALLS TO BE PLASTERED 1/2" THICK INSIDE AND OUTSIDE.
5. 12" THICK LIMESTONE BEDDING FOUNDATION SHALL BE REQUIRED UNDER ALL MANHOLES AND BASINS.
6. WHEN THE DEPTH OF BOX OR MANHOLE IS FOUR FOOT OR GREATER THE INSTALLATION OF STEPS WILL BE REQUIRED IN ACCORDANCE WITH PUBLIC WORKS STANDARDS.
7. THE MIN. DRAIN SIZE ACCEPTABLE FOR ANY INSTALLATION ON PUBLIC RIGHT-OF-WAY SHALL BE 24" INCHES IN DIAMETER.
8. CONTRACTOR WILL CONTACT THE DEPARTMANT OF ENGINEERING PRIOR TO ANY WORK DONE WITHIN THE COUNTY OR CITY RIGHT OF WAY OR SERVITUDE.

TRAFFIC CONTROLS
ANY WORK IN THE ROADWAY OR ADJACENT TO THE ROADWAY CAUSING AN INTERFERENCE TO VEHICULAR TRAFFIC REQUIRES PRIOR NOTIFICATION TO THE COUNTY OR CITY TRAFFIC ENGINEERING DIVISION AND CONFORMITY TO THE REQUIREMENTS OF THE UNIFORM MANUAL ON TRAFFIC CONTROL DEVICES OF THE STATE OF MISSISSIPPI. THE CONTRACTOR MUST FURNISH ALL NECESSARY TRAFFIC SIGNS AND/ OR BARRICADES AND MAINTAIN THEM DURING CONSTRUCTION ACTIVITY.

LEGEND
- PROPERTY LINE
- SETBACK LINE
- NEW BUILDING
- EXISTING CURB
- NEW CURB
- SLOPE LINE
- 15" DRAIN LINE
- SHEET PILE BULKHEAD WITH CAP
- HCP – HANDICAPPED PARKING
- CATCH BASIN W/ TEMPORARY INLET PROTECTION
- TEMPORARY SILT FENCE
- ×45.69 – EXISTING ELEVATIONS
- # X.X' – TOP OF GRATE
- (#) X.X' – INVERT ELEVATION
- X.X' – NEW ELEVATION'
- DIRECTIONAL FLOW

REVISED: 04-20-06
REVISED: 04-06-06

DRAINAGE PLAN

DR. EDUARDO HERNANDEZ
CEDAR LAKE ROAD
BILOXI, MISSISSIPPI

LA QUINTA INN & SUITES

DAMMON ENGINEERING. INC.
1006 FLORIDA AVENUE 985-649-5832 SLIDELL, LA. 70458
DAMMONENGINEERING.COM

SCALE:AS NOTED
FILE:
JOB NO. 1694
DATE:11-01-05
SHEET
C.3D
OF