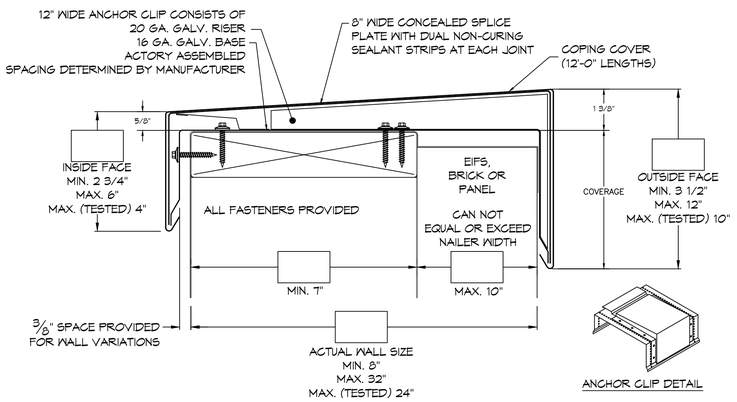

1 ANCHOR CLIP DETAIL
SCALE: N.T.S.

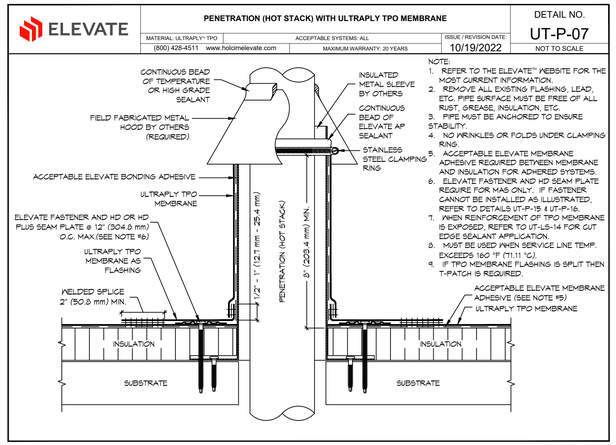

4 HOT STACK DETAIL
SCALE: N.T.S.

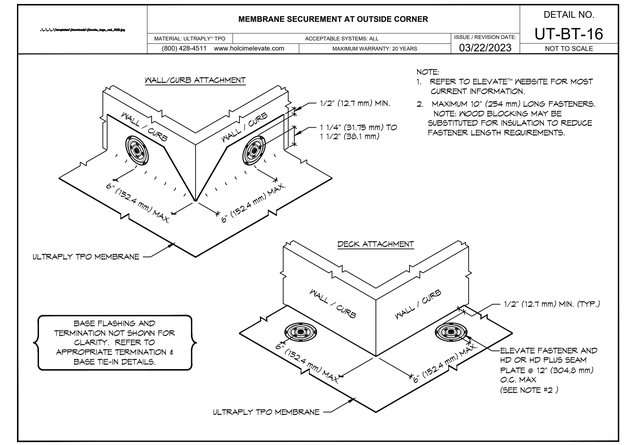

7 MEMBRANE DETAIL
SCALE: N.T.S.

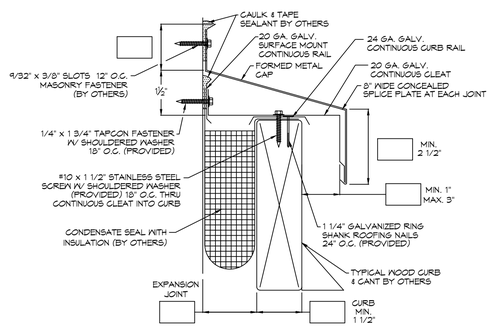

2 ROOF CAP DETAIL
SCALE: N.T.S.

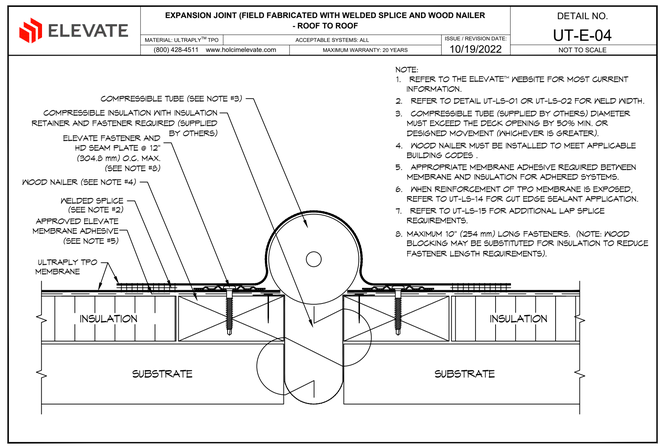

5 EXPANSION JOINT DETAIL
SCALE: N.T.S.

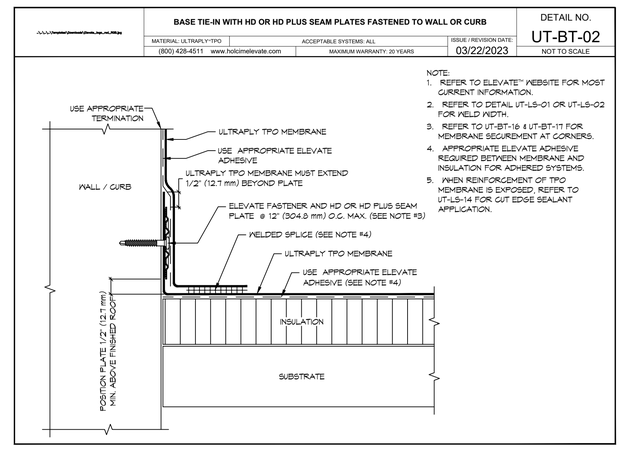

8 BASE TIE-IN DETAIL
SCALE: N.T.S.

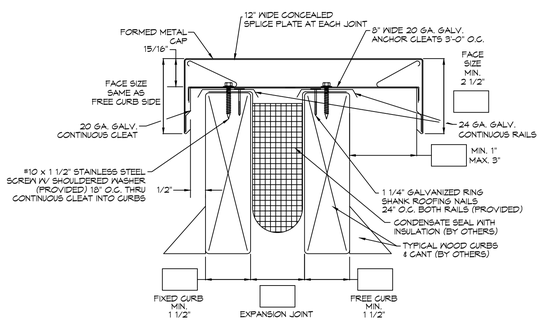

3 ROOF CAP DETAIL
SCALE: N.T.S.

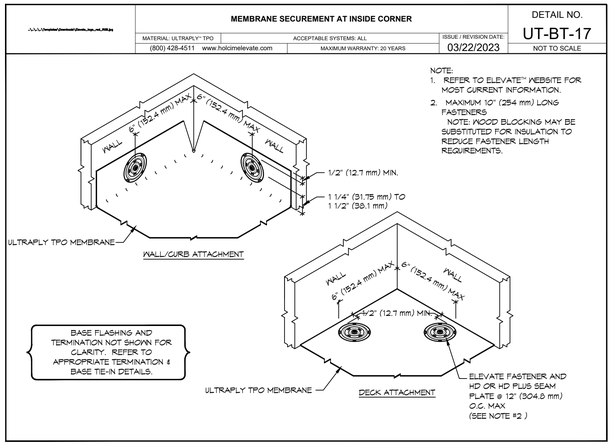

6 MEMBRANE DETAIL
SCALE: N.T.S.

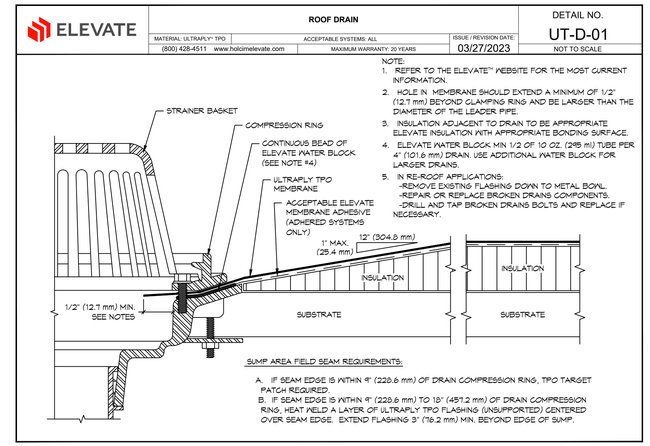

9 ROOF DRAIN
SCALE: N.T.S.

DAMMON ENGINEERING, INC.
LOUISIANA & MISSISSIPPI
www.dammonengineering.com
info@dammonengineering.com
PH: 985.649.5832
Chief Engineer: Brian Mistich, PE
5544 Saint Street
Slidell, LA 70458

#	DESCRIPTION	DATE

REVISIONS

SEAL:

NEW ROOF PLAN
RED ROOF INN
1662 GAISE BLVD.
SLIDELL, LA 70458

JOB No:	2481
DATE:	01-12-2023
DRAWN BY:	CSD
CHECKED BY:	JMS

The design, drawings and specifications, and copies thereof furnished by Dammon Engineering, Inc. are and shall remain the property of Dammon Engineering, Inc. They are to be used only with respect to this project and are not to be loaned, copied or disclosed to others for use on other projects or for any other purpose, without the written consent of Dammon Engineering, Inc. Visual contact with these drawings or specifications shall constitute conclusive evidence of acceptance of these restrictions.

SHEET TITLE:
ROOF PLAN DETAILS

DRAWING NUMBER:
A102

SHEET No: 6 of 1