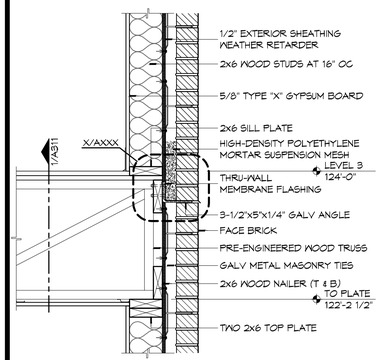

6 DETAIL
SCALE: 1" = 1'-0"

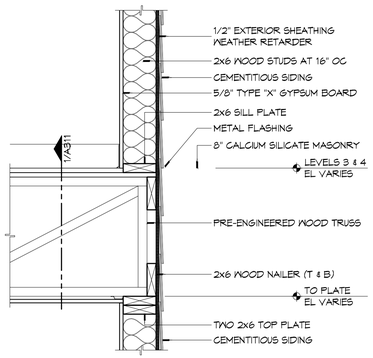

5 DETAIL
SCALE: 1" = 1'-0"

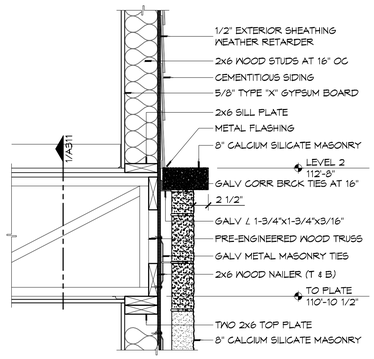

4 DETAIL
SCALE: 1" = 1'-0"

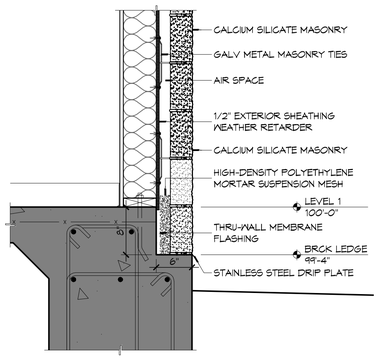

3 DETAIL
SCALE: 1" = 1'-0"

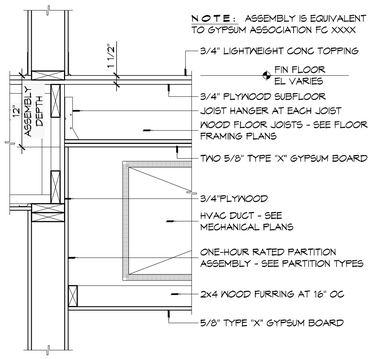

2 DETAIL
SCALE: 1" = 1'-0"

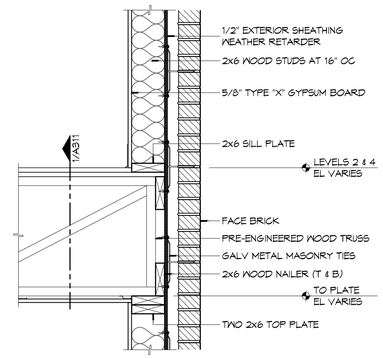

7 DETAIL
SCALE: 1" = 1'-0"

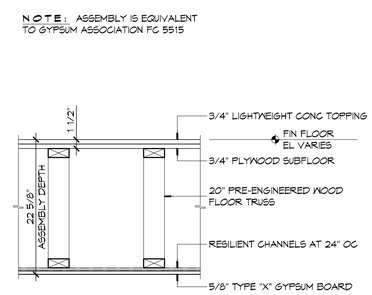

1 DETAIL
SCALE: 1" = 1'-0"

DAMMON
ENGINEERING, INC.
Architects & Engineers
www.dammonengineering.com
info@dammonengineering.com
PH: 985.649.5832
F: 985.641.5950
Chief Architect: Kevin J. Kinchen, NCARB
Chief Engineer: Brian Mistich, PE
5500 Oakridge Trail
Slidell, LA 70458

#	DESCRIPTION	DATE

REVISIONS

SEAL:

PRELIMINARY NOT FOR CONSTRUCTION

NEW HOTEL & RESTAURANT FOR
SPORTSMAN'S LODGE
LOT #1 LA HWY 21
HACKBERRY, LA 70645

JOB No: 2141 DATE: MAY 28, 2015
DRAWN BY: K.J.K. CHECKED BY: K.J.K.

THIS DRAWING & SPECIFICATION DOCUMENT IS THE PROPERTY OF DAMMON ENGINEERING, INC. AND MUST BE RETURNED ON REQUEST. THEY ARE TO BE USED ONLY FOR THIS PROJECT AND NOT TO BE LOANED OR REPRODUCED WITHOUT WRITTEN CONSENT. THE IDEAS AND DESIGNS INCORPORATED IN THESE DOCUMENTS, ALSO THE PROPERTY OF DAMMON ENGINEERING, INC. WERE PREPARED FOR THE PROJECT SPECIFIED HEREIN. THEY ARE NOT TO BE USED ON OTHER PROJECTS OR FOR THE COMPLETION OF THIS PROJECT BY OTHERS WITHOUT WRITTEN CONSENT OF DAMMON ENGINEERING, INC.

SHEET TITLE:
SECTION DETAILS

DRAWING NUMBER:
A311

SHEET No: Value of #