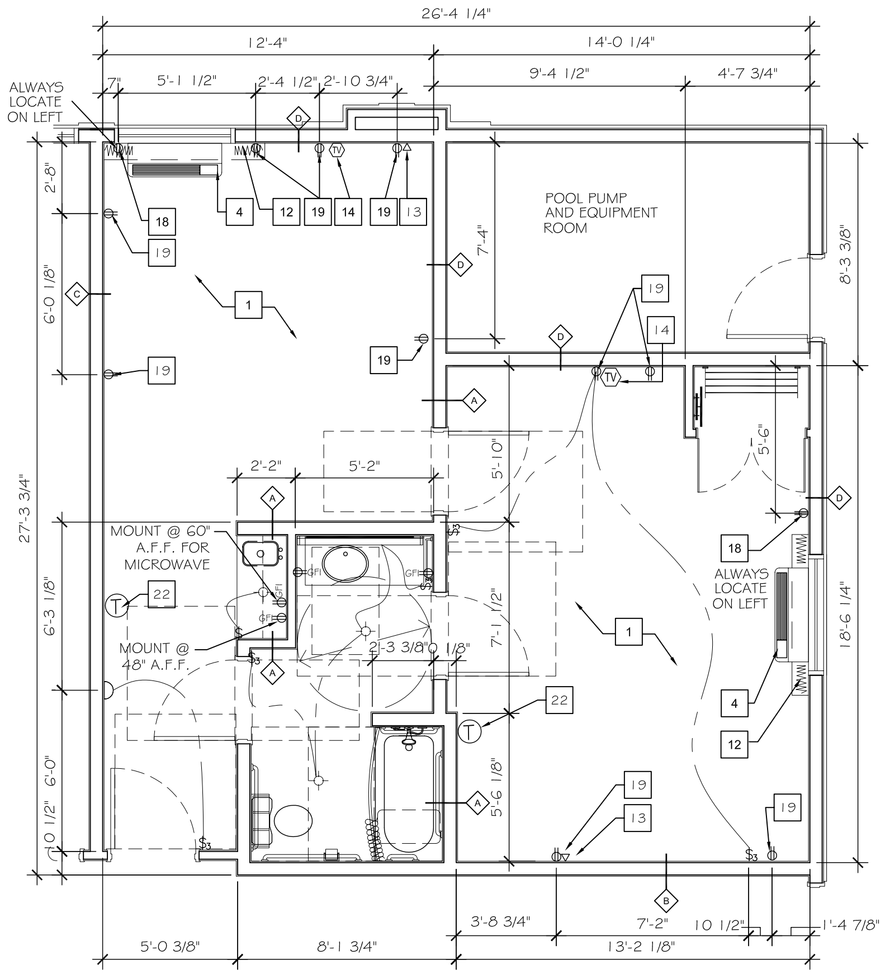

73 DIMENSIONAL CONTROL PLAN
SCALE: 1/4" = 1'-0"

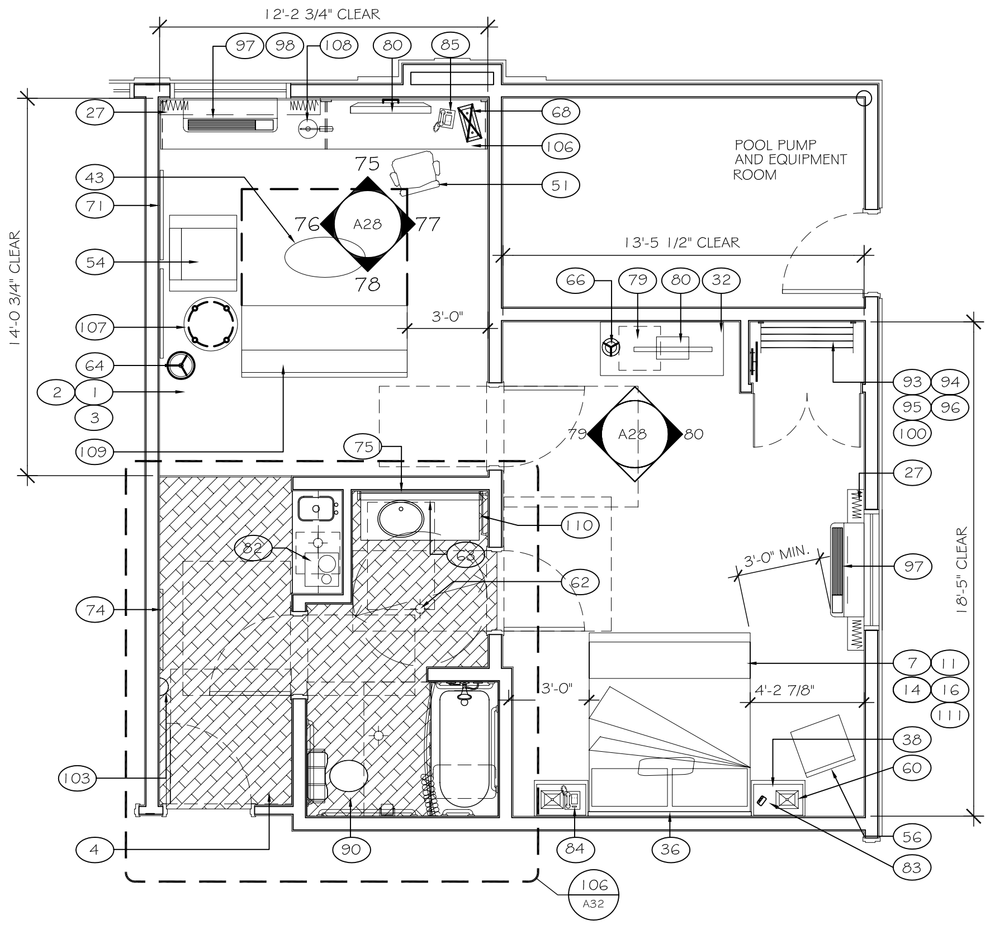

74 FURNITURE PLAN
SCALE: 1/4" = 1'-0"

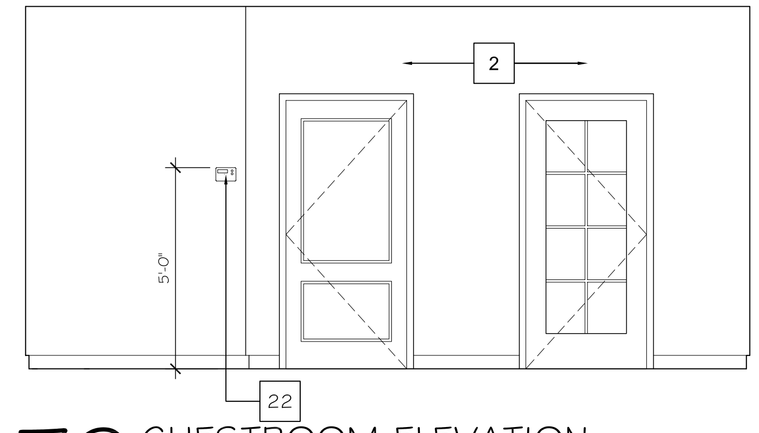

79 GUESTROOM ELEVATION
SCALE: 3/8" = 1'-0"

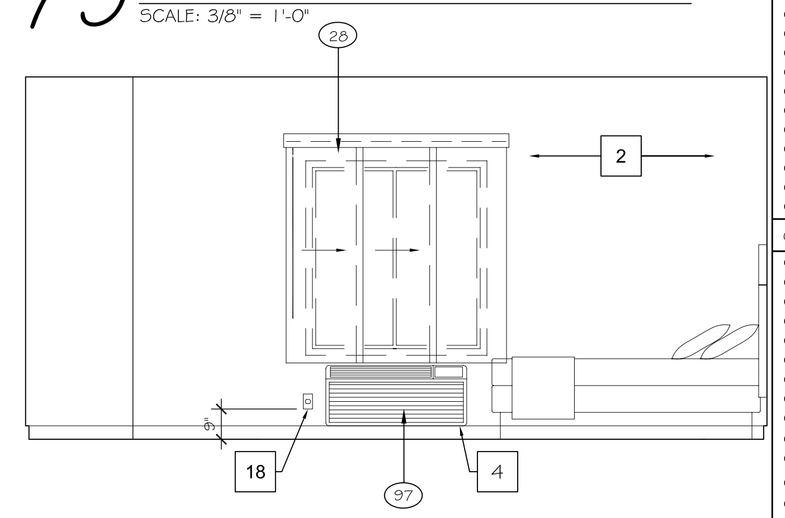

80 GUESTROOM ELEVATION
SCALE: 3/8" = 1'-0"

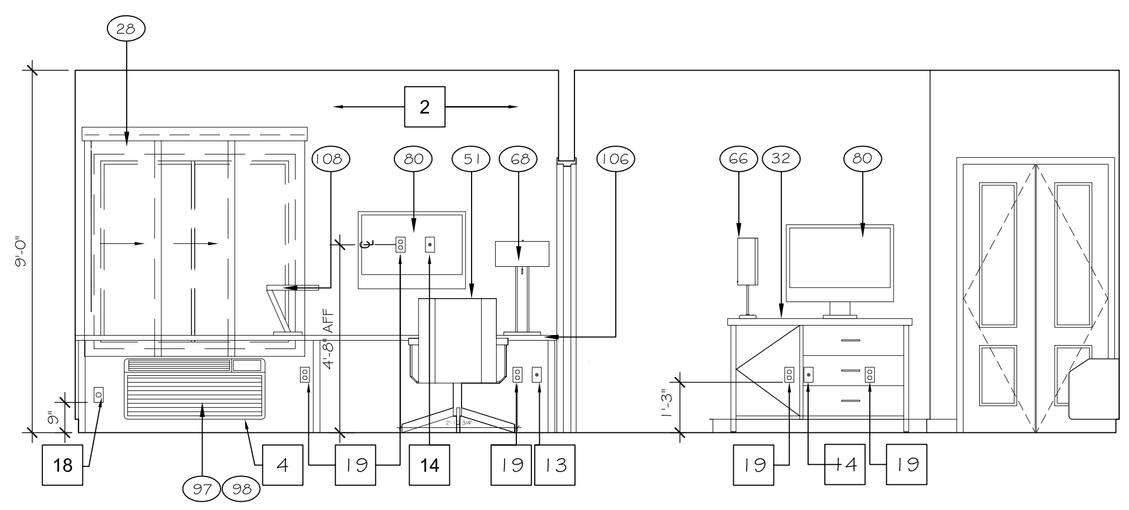

75 GUESTROOM ELEVATION
SCALE: 3/8" = 1'-0"

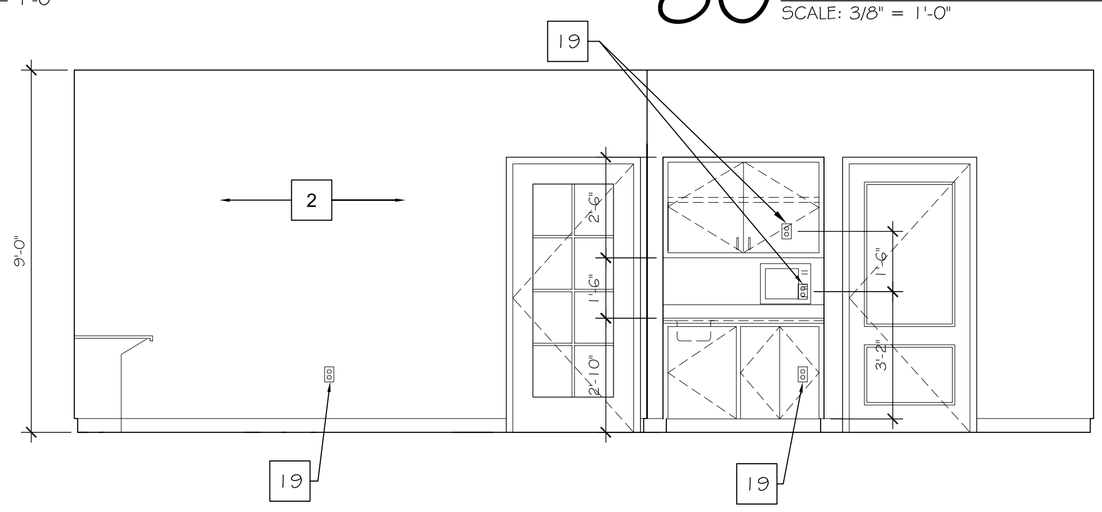

77 GUESTROOM ELEVATION
SCALE: 3/8" = 1'-0"

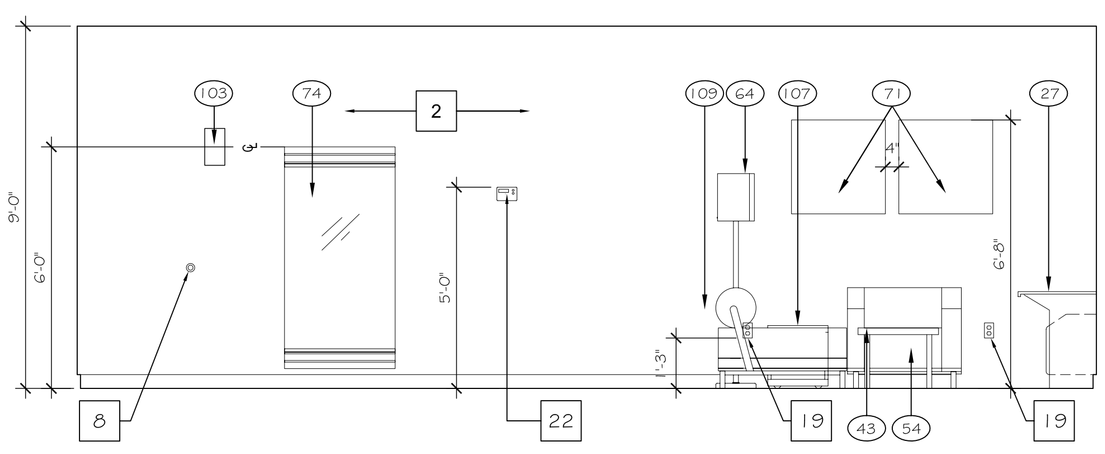

76 GUESTROOM ELEVATION
SCALE: 3/8" = 1'-0"

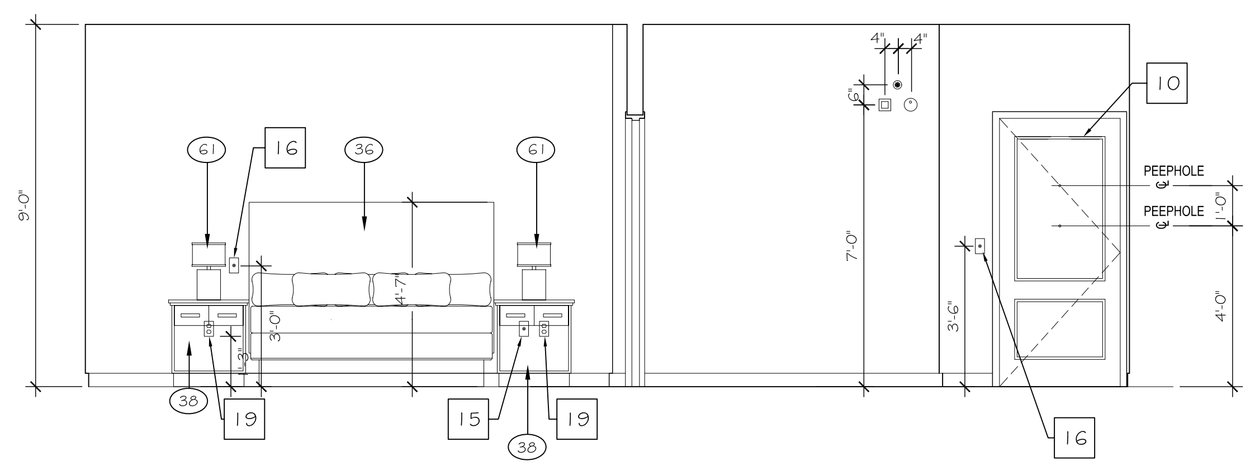

78 GUESTROOM ELEVATION
SCALE: 3/8" = 1'-0"

FF&E SCHEDULE

CARPET / FLOORING (00)		
1	GUESTROOM CARPET	V-GST-001-CP
2	GUESTROOM CARPET PAD	V-GST-001a-CPP
3	GUESTROOM CARPET BASE	V-GST-001b-CPB
4	GUESTROOM BATH RESILIENT TILE	V-GST-002-RT
BEDDING / DRAPERY (100)		
5	COVERLET FABRICATION - DD	V-GST-100D-BD
6	COVERLET FABRICATION - QUEEN	V-GST-100Q-BD
7	COVERLET FABRICATION - KING	V-GST-101-BD
8	COVERLET FABRIC	V-GST-100a-BDF
9	BED THROW FABRICATION DOUBLE	V-GST-102D-BD
10	BED THROW FABRICATION QUEEN	V-GST-102Q-BD
11	BED THROW FABRICATION KING	V-GST-102K-BD
12	BEDSKIRT FABRICATION DOUBLE	V-GST-103D-BD
13	BEDSKIRT FABRICATION QUEEN	V-GST-103Q-BD
14	BEDSKIRT FABRICATION KING	V-GST-103K-BD
15	BEDSKIRT FABRIC	V-GST-103a-BDF
16	MATTRESS AND BOXSPRING KING	V-GST-105-BD
17	BED BASE -KING	V-GST-105A-BD
18	MATTRESS AND BOXSPRING DOUBLE	V-GST-106-BD
19	BED BASE -DOUBLE	V-GST-106A-BD
20	MATTRESS AND BOXSPRING KING-ADA	V-GST-107-BD
21	BED BASE -KING ADA	V-GST-107B-BD
22	MATTRESS AND BOXSPRING DOUBLE-ADA	V-GST-108-BD
23	BED BASE -DOUBLE ADA	V-GST-108A-BD
24	MATTRESS AND BOXSPRING QUEEN	V-GST-109-BD
25	BED BASE -QUEEN	V-GST-109A-BD
26	MATTRESS AND BOXSPRING QUEEN-ADA	V-GST-110-BA
27	ROMAN SHADE & ROLLER SHADE	V-GST-120-WT
28	ADA SLIDER SHADE AT ACCESSIBLE ROOMS	V-GST-123-WT
29	NOT USED	-
30	SHEER AT FRENCH DOOR - NOT USED	**V-GST-122-WT**
31	SHEER FABRIC - NOT USED	V-GST-122a-WT
32	NECK ROLL PILLOW	V-GST-104-BD
CASEGOODS (200)		
33	DRESSER	V-GST-200-CG
34	DRESSER WITHOUT TOP - NOT USED	V-GST-200.1-CG
35	HEADBOARD- DD	V-GST-201D-CG
36	HEADBOARD- QUEEN	V-GST-201Q-CG
37	HEADBOARD- KING	V-GST-201K-CG
38	NIGHTSTAND-DDQQ	V-GST-202-CG
39	NIGHTSTAND-KING	V-GST-203-CG
40	DESK	V-GST-204-CG
41	DESK ON CASTERS	V-GST-205-CG
42	MICROFRIDGE CABINET/DRESSER	V-GST-207-CG
43	MICROFRIDGE CABINET/DRESSER W/O TOP - NOT USED	V-GST-207.1-CG
44	OVAL COFFEE TABLE	V-GST-209-CG
45	SMALL DRESSER - NOT USED	V-GST-214-CG
46	MICROFRIDGE CABINET - NOT USED	V-GST-215-CG
47	END TABLE	V-GST-216-CG
48	DESK PEDESTAL - NOT USED	V-GST-220-CG
49	DINING TABLE- NOT USED	V-GST-222-GST
50	HEADBOARD QUEEN	V-GST-225-CG
51	LARGE DESK (60")	V-GST-226-CG
52	WALL DESK	V-GST-206-CG
53	COFFEE TABLE W/CASTERS @ KING	V-GST-208-CG
54	VANITY BASE	V-GST-212-CG
55	VANITY BASE-ADA	**V-GST-213-CG**
CASEGOODS (300)		
56	TASK (DESK) CHAIR	V-GST-301-SG
57	SOFA SLEEPER	V-GST-302-SG
58	SOFA SLEEPER FABRIC	V-GST-302a-SGF
59	LOUNGE CHAIR	V-GST-304-SG
60	LOUNGE CHAIR FABRIC	V-GST-304a-SGF
61	SIDE CHAIR	V-GST-308-SG
62	SIDE CHAIR FABRIC	V-GST-308a-SGF
63	RECLINER - NOT USED	V-GST-309-SG
64	RECLINER FABRIC - NOT USED	V-GST-309a-SGF
65	CHAISE/LOUNGE OR OPTIONAL SLEEPER SOFA	V-GST-300-SG
LAMPS / LIGHTING (400)		
66	BEDSIDE LAMP	V-GST-403-LT
67	NOT USED	-
68	BATH CEILING FIXTURE	V-GST-401-LT
69	VANITY LIGHT AT BATH	V-GST-402-LT
70	FLOOR LAMP	V-GST-405-LT
71	VANITY LIGHT AT BATH- ADA	V-GST-406-LT
72	TABLE LAMP	V-GST-407-LT
73	CEILING LIGHT AT ENTRY	V-GST-408-LT
74	DESK LAMP-TALL	V-GST-409-LT
75	ENTRY SCONCE - NOT USED	V-GST-414-LT
76	FLOOR LAMP W/O TABLE - NOT USED	V-GST-416-LT
77	SIDE SCONCE	V-GST-400-LT
78	DESK LAMP-SHORT	V-GST-410-LT
79	TASK LAMP AT WALL DESK	V-GST-411-LT

FF&E SCHEDULE (CONTINUED)

ART/ MIRRORS (500)		
80	FRAMED ARTWORK IN GUESTROOM	V-GST-500-ART
81	FRAMED ARTWORK IN GUESTROOM-NOT USED	V-GST-500b-ART
82	FRAMED ARTWORK IN GUESTROOM-NOT USED	V-GST-500c-ART
83	FULL LENGTH MIRROR	V-GST-501-MR
84	VANITY MIRROR	V-GST-503-ART
85	ARTIST MIRROR	V-GST-507-MR
86	ARTIST MIRROR	V-GST-505-MR
87	VANITY MIRROR - ADA	V-GST-504-ART
GUESTROOM MISC (600)		
88	MICRO-FRIDGE UNIT	V-GST-601-MISC
89	MICROWAVE	V-GST-600a-MSC
90	REFRIDGERATOR	V-GST-601b-MISC
91	32" FLAT PANEL TV	V-GST-602-MSC
92	TV SWIVEL WALL MOUNT	V-GST-602a-MISC
93	COFFEE MAKER	V-GST-603-MSC
94	CLOCK RADIO	V-GST-604-MSC
95	BEDSIDE TELEPHONE	V-GST-605-MSC
96	SPEAKER TELEPHONE	V-GST-606-MSC
97	HAIR DRYER	V-GST-607-MSC
98	TOILET PAPER HOLDER	V-GST-608-MSC
99	SHOWER CURTAIN ROD	V-GST-609-MSC
100	TOWEL BAR	V-GST-610-MSC
101	DECORATIVE TOWEL SHELF	V-GST-611-MSC
102	FASCIAL TISSUE DISPENSER	V-GST-612-MSC
103	ROBE HOOK	V-GST-613-MSC
104	SUIT HANGER MINI HOOK	V-GST-614A-MSC
104a	SKIRT HANGER MINI HOOK	V-GST-614B-MSC
105	LUGGAGE RACK	V-GST-615-MSC
106	IRON, IRON BOARD & HOOK	V-GST-616-MSC
107	PTAC	V-GST-617-MSC
108	PTAC DIFLECTOR	V-GST-618-MSC
109	COAT CLOSET ROD W/O SHELF	V-GST-619-MSC
110	COAT CLOSET ROD W/ SHELF	V-GST-620-MSC
111	GUESTROOM DOOR LOCK	V-GST-621-MSC
WALLCOVERING (800)		
112	NOT USED	NOT USED

KEY SCHEDULE

1	CARPET PAD & BASE
2	TEXTURE DRYWALL - REFER TO FINISH SCHEDULE
3	CLOTHES ROD.
4	THRU - WALL AIR CONDITIONING UNIT ROUGH OPENING 3' 6-1/8"X1' 4-1/4" MIN.
5	REINFORCING BLOCKING IN WALL.
6	TEXTURED CEILING - REFER TO FINISH SCHEDULE
7	DOOR MOUNTED DOOR STOP
8	WALL MOUNTED DOOR STOP
9	DECORATIVE WOOD MOULDING
10	2 PANEL METAL DOOR AND FRAME - PAINTED, REFER TO DOOR SCHEDULE.TESA LOCK HARDWARE
11	NOT USED
12	GYPSUM BOARD RETURN AT HEAD, JAMB & SILL
13	TELEPHONE/ DATA DUPLEX HOUSING, PROVIDE 3/4" CONDUIT PULL.
14	TELEVISION OUTLET w/ 2-CAT-5 OUTLETS IN A SINGLE "J" BOX, REFER TO FLOOR PLANS AND ELEVATIONS FOR DIMENSIONS AND LOCATION.
15	TELEPHONE OUTLET, REFER TO FLOOR PLANS AND ELEVATIONS FOR DIMENSIONS AND LOCATION.
16	LIGHT SWITCH, REFER TO FLOOR PLANS AND ELEVATIONS FOR DIMENSIONS AND LOCATION. ILLUMINATED SWITCH AT ENTRY AND BATHROOM
17	CONNECTING DOORS. SEE BUILDING PLAN FOR LOCATION
18	208V. OUTLET. REFER TO ELECTRICAL PLANS FOR MORE INFORMATION. ALWAYS LOCATE TO LEFT OF PTAC.
19	DUPLEX OUTLET. INSTALL HORIZONTALLY AT NIGHTSTANDS.
20	QUAD OUTLET
21	MOUNTING HEIGHT OF HEADBOARD, NIGHTSTAND WALL LAMP(S) BASED ON LOW PROFILE BOXSPRING.
22	T-STAT HEIGHT IS 48" IN HANDICAPPED ACCESSIBLE ROOMS AND 60" IN TYPICAL ROOMS.

DRAWING NOTES

A. VINYL FLOORING:
VINYL WOOD FLOORING TO BE INSTALLED AT 45° FROM THE ROOM AXIS. DETERMINE STARTING POINT FOR EACH ROW SO AS TO MAINTAIN A MINIMUM 12" LONG PIECE AT EDGES.

GENERAL NOTES

1. ELECTRICAL OUTLETS IN ADJACENT ROOMS OF THE SAME TYPE SHALL BE OFFSET A MAXIMUM OF 8" & SEP. BY STUD.
2. REFER TO BUILDING PLANS FOR LOCATION OF GUEST ROOM TYPES.
3. ALL PLAN DIMENSIONS ARE TO FACE OF STUD
4. REF. A32 THRU A34 FOR GUESTROOM BATHROOM FURNISHINGS.
5. REF. A20 FOR PUBLIC RESTROOM FURNISHINGS.

REFERENCE FINISH SELECTION BOOK FOR PAINT AND MATERIAL LEGEND. XX

A FOR F.F.E (V-GST-...) SCHEDULE SEE VIBRANT DESIGN SCEME MANUAL

B REFER A-16 FOR PARTITION TYPES

DAMMON ENGINEERING, INC.
Architects & Engineers
dammoneng@bellsouth.net
PHONE: 985-649-5832
FAX: 985-641-5950

CHIEF ENGINEER: BRIAN MISTICH, P.E.
CHIEF ARCHITECT: KEVIN RINCHEN
5107 CONSTITUTION TRAIL
SLIDELL, LA 70458

The above drawings and specifications, designs and arrangements represented thereby are and shall remain the property of the undersigned and may not be used in whole or in part for any other project without the express written consent of the undersigned. These drawings and specifications are instruments of service and are protected under copyright laws. Reproduction or publication of these drawings or specifications shall constitute consent to the use of the undersigned.

LAQUINTA INNS & SUITES

5107 CONSTITUTION DRIVE
WEST MONROE, LOUISIANA 71292

JOB No: 2196	DATE: 04-15-2014
DRAWN BY: JTL	CHECKED BY: CKD

#	DESCRIPTION	DATE
REVISIONS		

TWO ROOM ACCESSIBLE SUITE DETAILS

SHEET No: 36 OF 53

A28