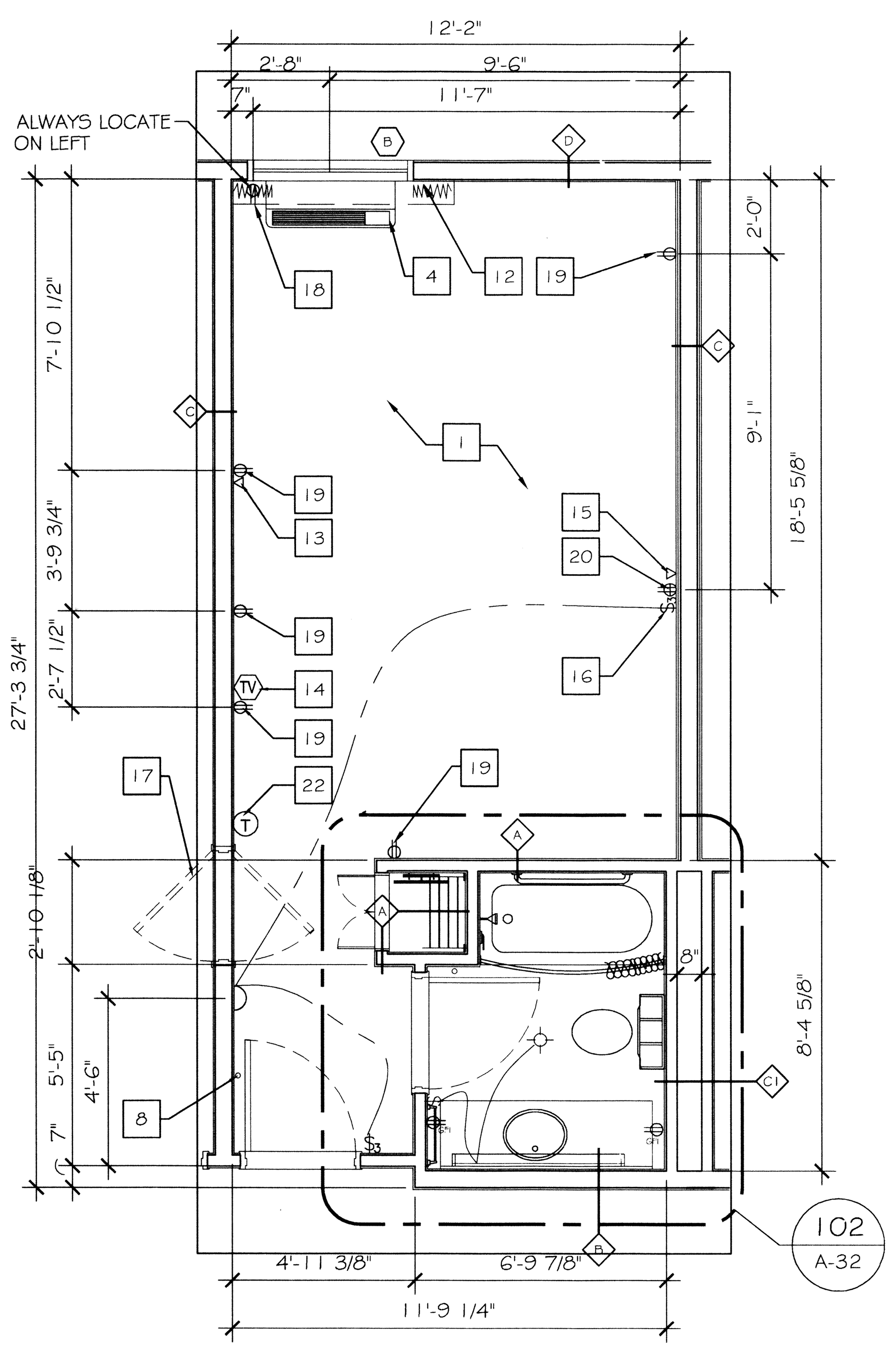


# 61 DIMENSIONAL CONTROL PLAN

SCALE: 1/4" = 1'-0"

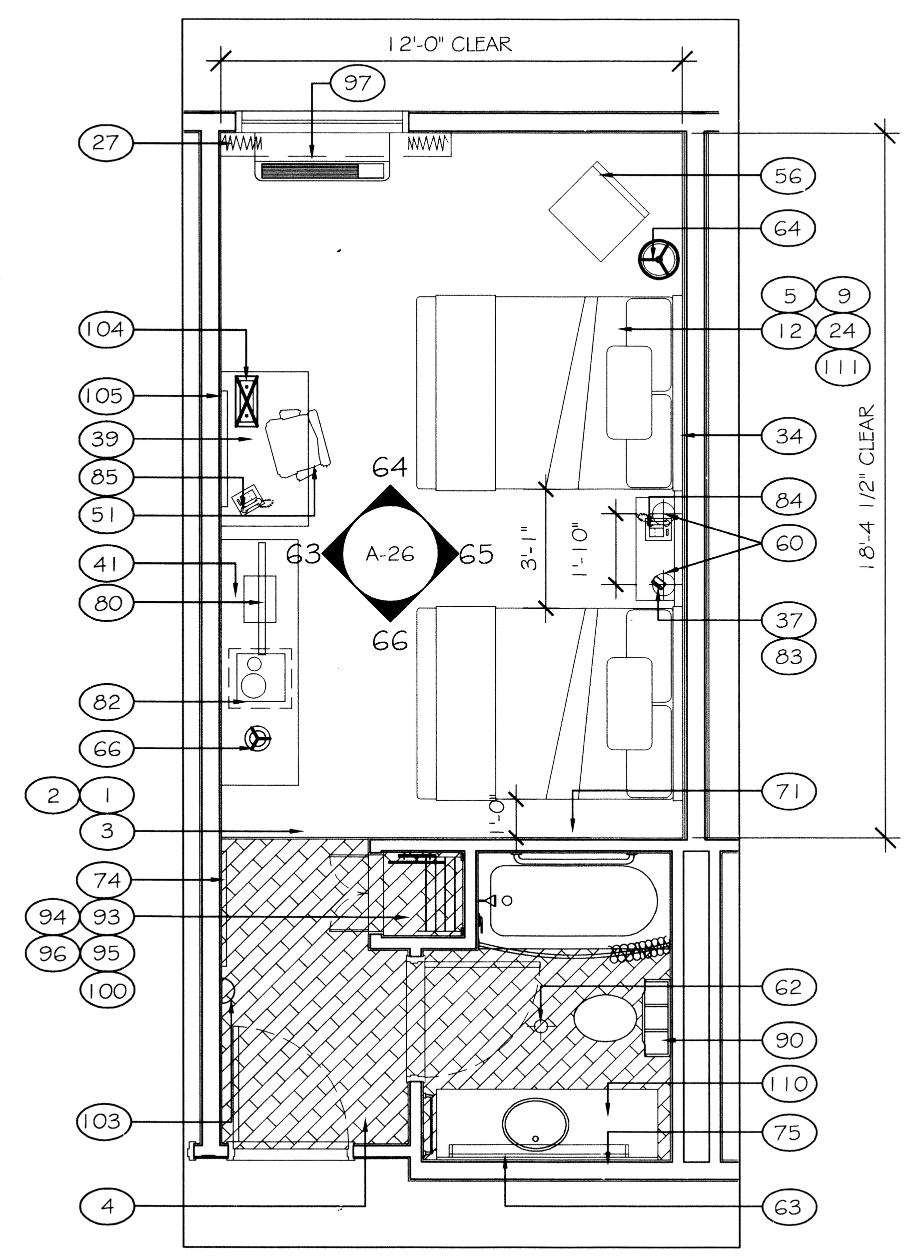


# 62 FURNITURE PLAN

SCALE: 1/4" = 1'-0"

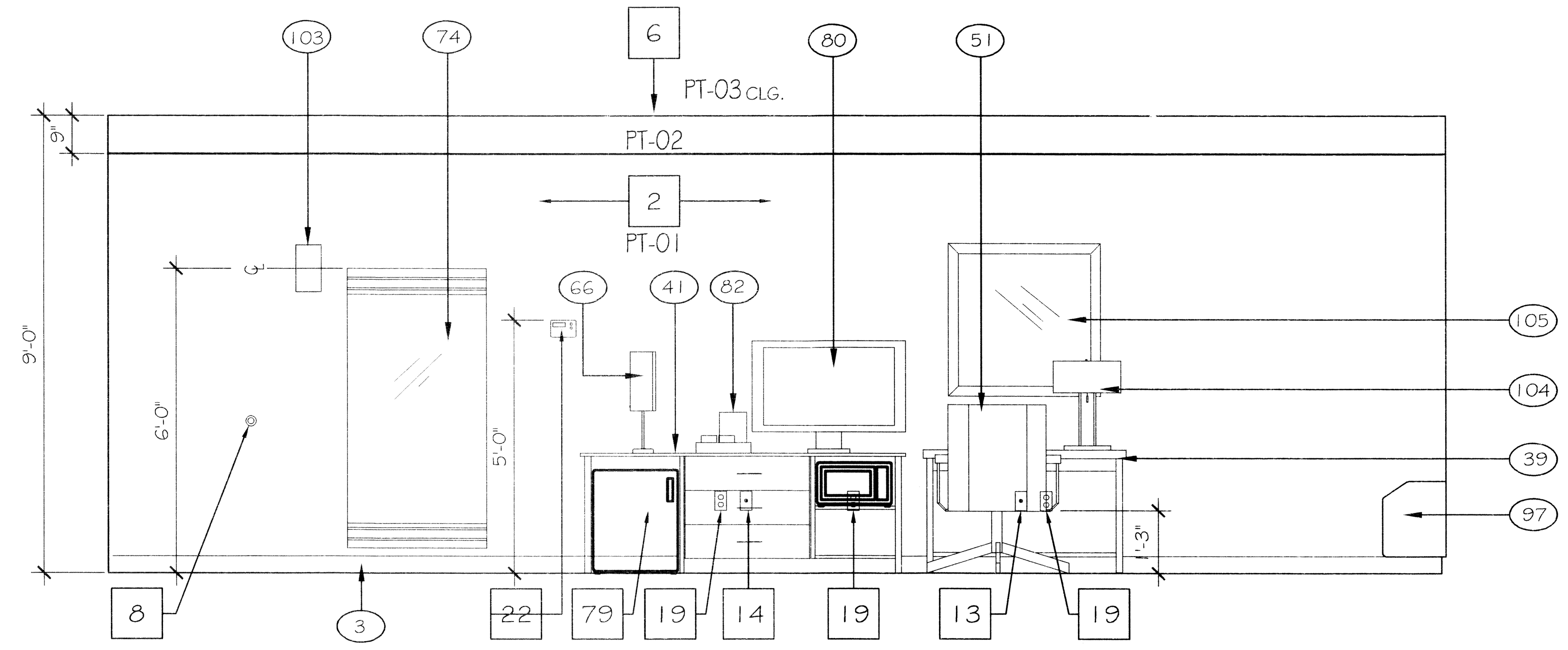


# 63 GUESTROOM ELEVATION

SCALE: 3/8" = 1'-0"

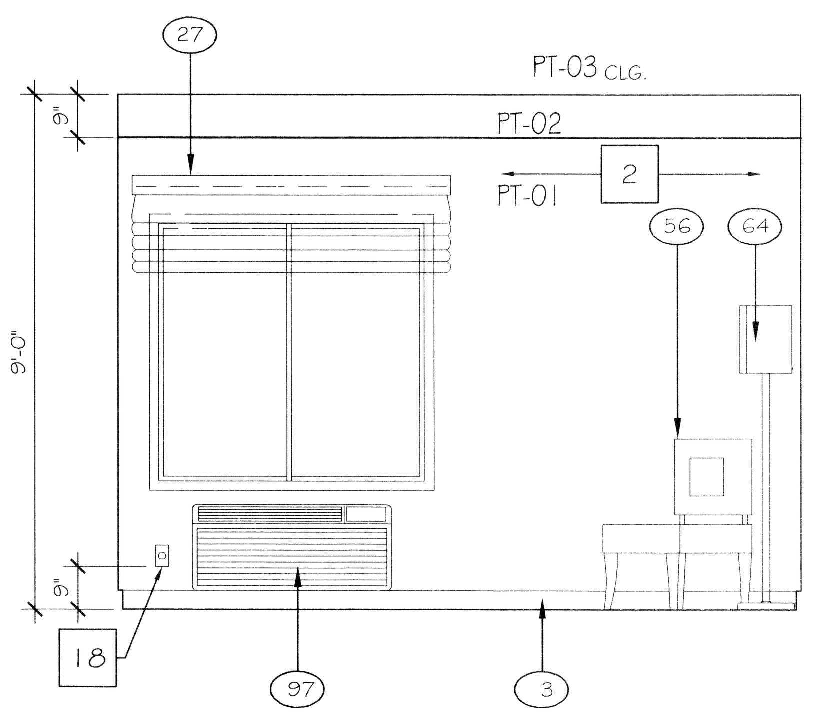


# 64 GUESTROOM ELEVATION

SCALE: 3/8" = 1'-0"

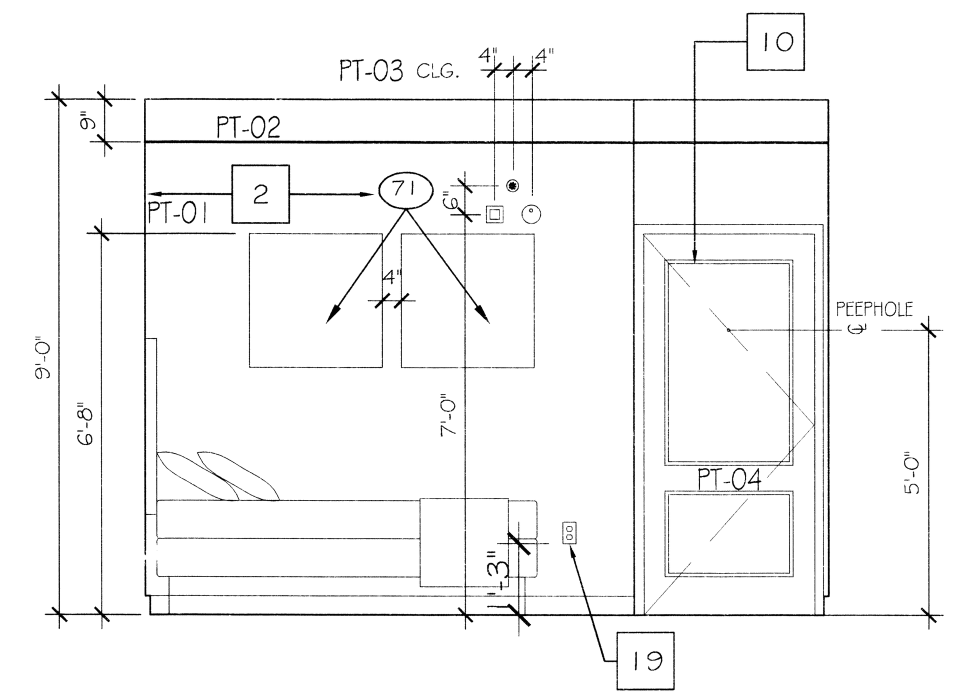


# 66 GUESTROOM ELEVATION

SCALE: 3/8" = 1'-0"

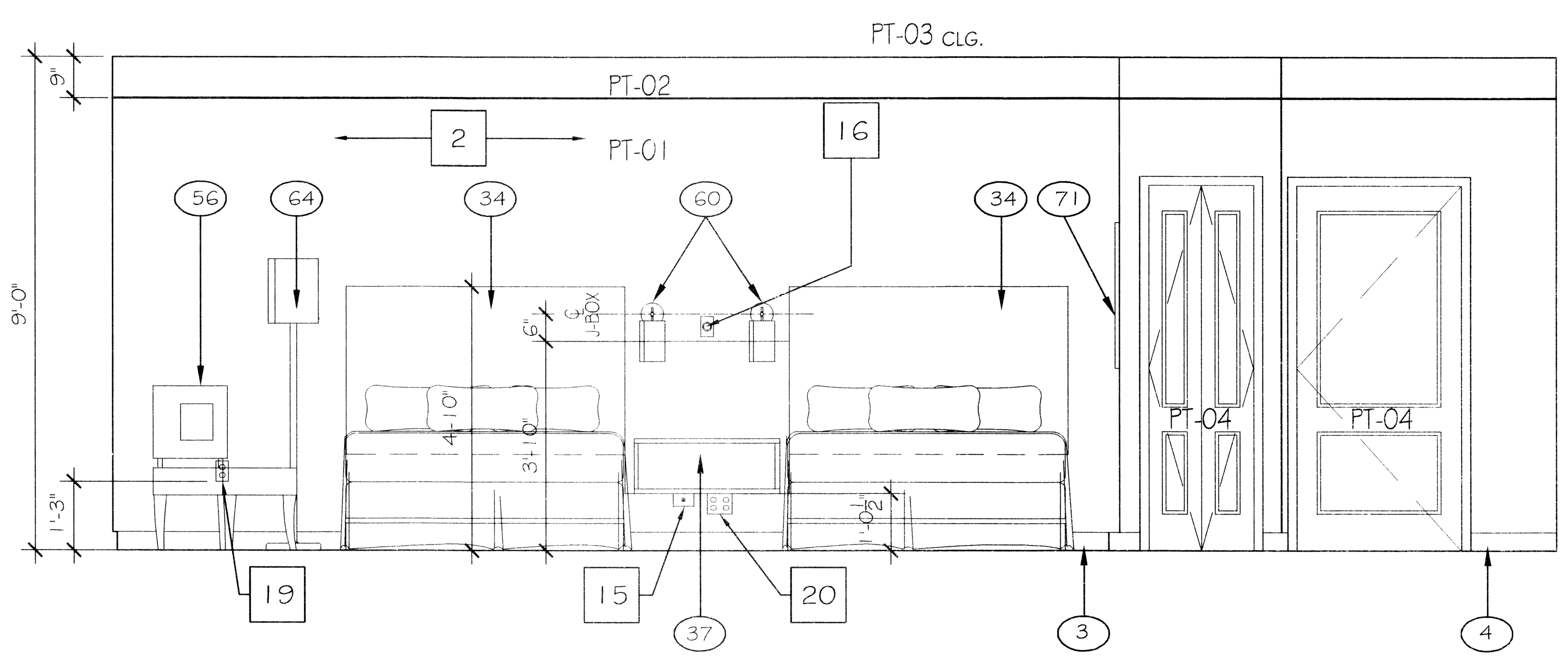


# 65 GUESTROOM ELEVATION

SCALE: 3/8" = 1'-0"

## DRAWING NOTES

A. VINYL FLOORING:
VINYL WOOD FLOORING TO BE INSTALLED AT 45° FROM THE ROOM AXIS. DETERMINE STARTING POINT FOR EACH ROW SO AS TO MAINTAIN A MINIMUM 12" LONG PIECE AT EDGES.

## GENERAL NOTES

1. ELECTRICAL OUTLETS IN ADJACENT ROOMS OF THE SAME TYPE SHALL BE OFFSET A MAXIMUM OF 8" & SEP. BY STUD.
2. REFER TO BUILDING PLANS FOR LOCATION OF GUEST ROOM TYPES.
3. ALL PLAN DIMENSIONS ARE TO FACE OF STUD
4. REF. A32 THRU A34 FOR GUESTROOM BATHROOM FURNISHINGS.
5. REF. A20 FOR PUBLIC RESTROOM FURNISHINGS.

REFERENCE FINISH SELECTION BOOK FOR PAINT AND MATERIAL LEGEND. XX

A FOR F.F.E (V-GST-...) SCHEDULE SEE VIBRANT DESIGN SCEME MANUAL

B REFER A-16 FOR PARTITION TYPES

## FF&E SCHEDULE

| | | |
|---|---|---|
| **CARPET / FLOORING (00)** | | |
| 1 | GUESTROOM CARPET | V-GST-001-CP |
| 2 | GUESTROOM CARPET PAD | V-GST-001a-CPP |
| 3 | GUESTROOM CARPET BASE | V-GST-001b-CPB |
| 4 | GUESTROOM BATH RESILIENT TILE | V-GST-002-RT |
| **BEDDING / DRAPERY (100)** | | |
| 5 | COVERLET FABRICATION - DD | V-GST-100D-BD |
| 6 | COVERLET FABRICATION - QUEEN | V-GST-100Q-BD |
| 7 | COVERLET FABRICATION - KING | V-GST-101-BD |
| 8 | COVERLET FABRIC | V-GST-100a-BDF |
| 9 | BED THROW FABRICATION DOUBLE | V-GST-102D-BD |
| 10 | BED THROW FABRICATION QUEEN | V-GST-102Q-BD |
| 11 | BED THROW FABRICATION KING | V-GST-102K-BD |
| 12 | BEDSKIRT FABRICATION DOUBLE | V-GST-103D-BD |
| 13 | BEDSKIRT FABRICATION QUEEN | V-GST-103Q-BD |
| 14 | BEDSKIRT FABRICATION KING | V-GST-103K-BD |
| 15 | BEDSKIRT FABRIC | V-GST-103a-BDF |
| 16 | MATTRESS AND BOXSPRING KING | V-GST-105-BD |
| 17 | BED BASE -KING | V-GST-105A-BD |
| 18 | MATTRESS AND BOXSPRING DOUBLE | V-GST-106-BD |
| 19 | BED BASE -DOUBLE | V-GST-106A-BD |
| 20 | MATTRESS AND BOXSPRING KING-ADA | V-GST-107-BD |
| 21 | BED BASE -KING ADA | V-GST-107B-BD |
| 22 | MATTRESS AND BOXSPRING DOUBLE-ADA | V-GST-108-BD |
| 23 | BED BASE -DOUBLE ADA | V-GST-108A-BD |
| 24 | MATTRESS AND BOXSPRING QUEEN | V-GST-109-BD |
| 25 | BED BASE -QUEEN | V-GST-109A-BD |
| 26 | MATTRESS AND BOXSPRING QUEEN-ADA | V-GST-110-BA |
| 27 | ROMAN SHADE & ROLLER SHADE | V-GST-120-WT |
| 28 | ADA SLIDER SHADE AT ACCESSIBLE ROOMS | V-GST-123-WT |
| 29 | NOT USED | - |
| 30 | SHEER AT FRENCH DOOR - NOT USED | V-GST-122-WT |
| 31 | SHEER FABRIC - NOT USED | V-GST-122a-WT |
| 111 | NECK ROLL PILLOW | V-GST-104-BD |
| **CASEGOODS (200)** | | |
| 32 | DRESSER | V-GST-200-CG |
| 33 | DRESSER WITHOUT TOP - NOT USED | V-GST-200.1-CG |
| 34 | HEADBOARD- DD | V-GST-201D-CG |
| 35 | HEADBOARD- QUEEN | V-GST-201Q-CG |
| 36 | HEADBOARD- KING | V-GST-201K-CG |
| 37 | NIGHTSTAND-DD/QQ | V-GST-202-CG |
| 38 | NIGHTSTAND-KING | V-GST-203-CG |
| 39 | DESK | V-GST-204-CG |
| 40 | DESK ON CASTERS | V-GST-205-CG |
| 41 | MICROFRIDGE CABINET/DRESSER | V-GST-207-CG |
| 42 | MICROFRIDGE CABINET/DRESSER W/O TOP - NOT USED | V-GST-207.1-CG |
| 43 | OVAL COFFEE TABLE | V-GST-209-CG |
| 44 | SMALL DRESSER - NOT USED | V-GST-214-CG |
| 45 | MICROFRIDGE CABINET - NOT USED | V-GST-215-CG |
| 46 | END TABLE | V-GST-216-CG |
| 47 | DESK PEDESTAL - NOT USED | V-GST-220-CG |
| 48 | DINING TABLE- NOT USED | V-GST-222-GST |
| 49 | HEADBOARD QUEEN | V-GST-225-CG |
| 50 | LARGE DESK (60") | V-GST-226-CG |
| 106 | WALL DESK | V-GST-206-CG |
| 107 | COFFEE TABLE W/CASTERS @ KING | V-GST-208-CG |
| 110 | VANITY BASE | V-GST-212-CG |
| 113 | VANITY BASE-ADA | V-GST-213-CG |
| **CASEGOODS (300)** | | |
| 51 | TASK (DESK) CHAIR | V-GST-301-SG |
| 52 | SOFA SLEEPER | V-GST-302-SG |
| 53 | SOFA SLEEPER FABRIC | V-GST-302a-SGF |
| 54 | LOUNGE CHAIR | V-GST-304-SG |
| 55 | LOUNGE CHAIR FABRIC | V-GST-304a-SGF |
| 56 | SIDE CHAIR | V-GST-308-SG |
| 57 | SIDE CHAIR FABRIC | V-GST-308a-SGF |
| 58 | RECLINER - NOT USED | V-GST-309-SG |
| 59 | RECLINER FABRIC - NOT USED | V-GST-309a-SGF |
| 109 | CHAISE/LOUNGE OR OPTIONAL SLEEPER SOFA | V-GST-300-SG |
| **LAMPS / LIGHTING (400)** | | |
| 60 | BEDSIDE LAMP | V-GST-403-LT |
| 61 | NOT USED | - |
| 62 | BATH CEILING FIXTURE | V-GST-401-LT |
| 63 | VANITY LIGHT AT BATH | V-GST-402-LT |
| 64 | FLOOR LAMP | V-GST-405-LT |
| 65 | VANITY LIGHT AT BATH- ADA | V-GST-406-LT |
| 66 | TABLE LAMP | V-GST-407-LT |
| 67 | CEILING LIGHT AT ENTRY | V-GST-408-LT |
| 68 | DESK LAMP-TALL | V-GST-409-LT |
| 69 | ENTRY SCONCE - NOT USED | V-GST-414-LT |
| 70 | FLOOR LAMP W/O TABLE - NOT USED | V-GST-416-LT |
| 103 | SIDE SCONCE | V-GST-400-LT |
| 104 | DESK LAMP-SHORT | V-GST-410-LT |
| 108 | TASK LAMP AT WALL DESK | V-GST-411-LT |

## FF&E SCHEDULE (CONTINUED)

| | | |
|---|---|---|
| **ART/ MIRRORS (500)** | | |
| 71 | FRAMED ARTWORK IN GUESTROOM | V-GST-500-ART |
| 72 | FRAMED ARTWORK IN GUESTROOM-NOT USED | V-GST-500b-ART |
| 73 | FRAMED ARTWORK IN GUESTROOM-NOT USED | V-GST-500c-ART |
| 74 | FULL LENGTH MIRROR | V-GST-501-MR |
| 75 | VANITY MIRROR | V-GST-503-ART |
| 76 | ARTIST MIRROR | V-GST-507-MR |
| 105 | ARTIST MIRROR | V-GST-505-MR |
| 112 | VANITY MIRROR - ADA | V-GST-504-ART |
| **GUESTROOM MISC (600)** | | |
| 77 | MICRO-FRIDGE UNIT | V-GST-601-MISC |
| 78 | MICROWAVE | V-GST-600a-MSC |
| 79 | REFRIDGERATOR | V-GST-601b-MSC |
| 80 | 32" FLAT PANEL TV | V-GST-602-MSC |
| 81 | TV SWIVEL WALL MOUNT | V-GST-602a-MSC |
| 82 | COFFEE MAKER | V-GST-603-MSC |
| 83 | CLOCK RADIO | V-GST-604-MSC |
| 84 | BEDSIDE TELEPHONE | V-GST-605-MSC |
| 85 | SPEAKER TELEPHONE | V-GST-606-MSC |
| 86 | HAIR DRYER | V-GST-607-MSC |
| 87 | TOILET PAPER HOLDER | V-GST-608-MSC |
| 88 | SHOWER CURTAIN ROD | V-GST-609-MSC |
| 89 | TOWEL BAR | V-GST-610-MSC |
| 90 | DECORATIVE TOWEL SHELF | V-GST-611-MSC |
| 91 | FASCIAL TISSUE DISPENSER | V-GST-612-MSC |
| 92 | ROBE HOOK | V-GST-613-MSC |
| 93 | SUIT HANGER MINI HOOK | V-GST-614A-MSC |
| 94 | SKIRT HANGER MINI HOOK | V-GST-614B-MSC |
| 95 | LUGGAGE RACK | V-GST-615-MSC |
| 96 | IRON, IRON BOARD & HOOK | V-GST-616-MSC |
| 97 | PTAC | V-GST-617-MSC |
| 98 | PTAC DIFLECTOR | V-GST-618-MSC |
| 99 | COAT CLOSET ROD W/O SHELF | V-GST-619-MSC |
| 100 | COAT CLOSET ROD W/ SHELF | V-GST-620-MSC |
| 101 | GUESTROOM DOOR LOCK | V-GST-621-MSC |
| **WALLCOVERING (800)** | | |
| 102 | NOT USED | NOT USED |

## KEY SCHEDULE

| | |
|---|---|
| 1 | CARPET PAD & BASE |
| 2 | TEXTURE DRYWALL - REFER TO FINISH SCHEDULE |
| 3 | CLOTHES ROD. |
| 4 | THRU - WALL AIR CONDITIONING UNIT ROUGH OPENING 3' 6-1/8"X1' 4-1/4" MIN. |
| 5 | REINFORCING BLOCKING IN WALL. |
| 6 | TEXTURED CEILING - REFER TO FINISH SCHEDULE |
| 7 | DOOR MOUNTED DOOR STOP |
| 8 | WALL MOUNTED DOOR STOP |
| 9 | DECORATIVE WOOD MOULDING |
| 10 | 2 PANEL METAL DOOR AND FRAME - PAINTED, REFER TO DOOR SCHEDULE.TESA LOCK HARDWARE |
| 11 | NOT USED |
| 12 | GYPSUM BOARD RETURN AT HEAD, JAMB & SILL |
| 13 | TELEPHONE/ DATA DUPLEX HOUSING, PROVIDE 3/4" CONDUIT PULL. |
| 14 | TELEVISION OUTLET w/ 2-CAT-5 OUTLETS IN A SINGLE "J" BOX, REFER TO FLOOR PLANS AND ELEVATIONS FOR DIMENSIONS AND LOCATION. |
| 15 | TELEPHONE OUTLET, REFER TO FLOOR PLANS AND ELEVATIONS FOR DIMENSIONS AND LOCATION. |
| 16 | LIGHT SWITCH, REFER TO FLOOR PLANS AND ELEVATIONS FOR DIMENSIONS AND LOCATION. ILLUMINIATED SWITCH AT ENTRY AND BATHROOM |
| 17 | CONNECTING DOORS. SEE BUILDING PLAN FOR LOCATION |
| 18 | 208V. OUTLET. REFER TO ELECTRICAL PLANS FOR MORE INFORMATION. ALWAYS LOCATE TO LEFT OF PTAC. |
| 19 | DUPLEX OUTLET. INSTALL HORIZONTALLY AT NIGHTSTANDS. |
| 20 | QUAD OUTLET |
| 21 | MOUNTING HEIGHT OF HEADBOARD, NIGHTSTAND WALL LAMP(S) BASED ON LOW PROFILE BOXSPRING. |
| 22 | T-STAT HEIGHT IS 48" IN HANDICAPPED ACCESSIBLE ROOMS AND 60" IN TYPICAL ROOMS. |


DAMMON ENGINEERING, INC.
Architects & Engineers
dammonengineering.com
dammoneng@bellsouth.net
PHONE: 985-649-5832
FAX: 985-641-5950
CHIEF ENGINEER: BRIAN MISTICH, P.E.
CHIEF ARCHITECT: KEVIN KINCHEN
554 OLD SPANISH TRAIL
SLIDELL, LA 70458


LAQUINTA INNS & SUITES
507 CONSTITUTION DRIVE
WEST MONROE, LOUISIANA 71292

JOB No: 2196 | DATE: 02-03-2014
DRAWN BY: JTL | CHECKED BY: CKD

REVISIONS

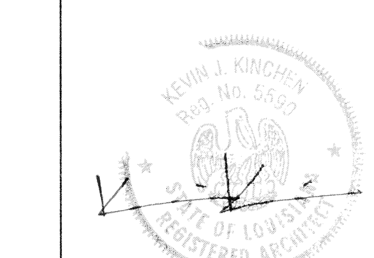


2/5/14

DOUBLE QUEEN SUITE DETAILS

SHEET No: 34 OF 53

A26