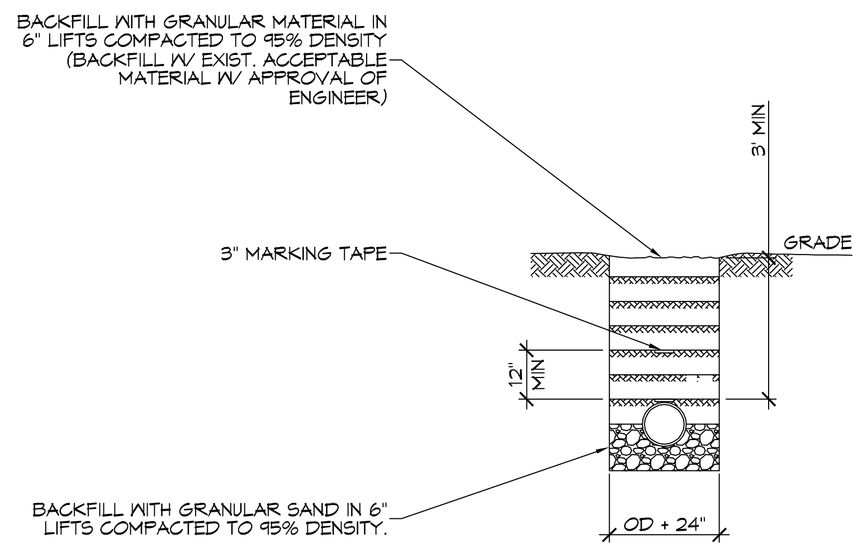

2 DETAIL
SCALE: 1/4" = 1'-0"

PIPE BEDDING

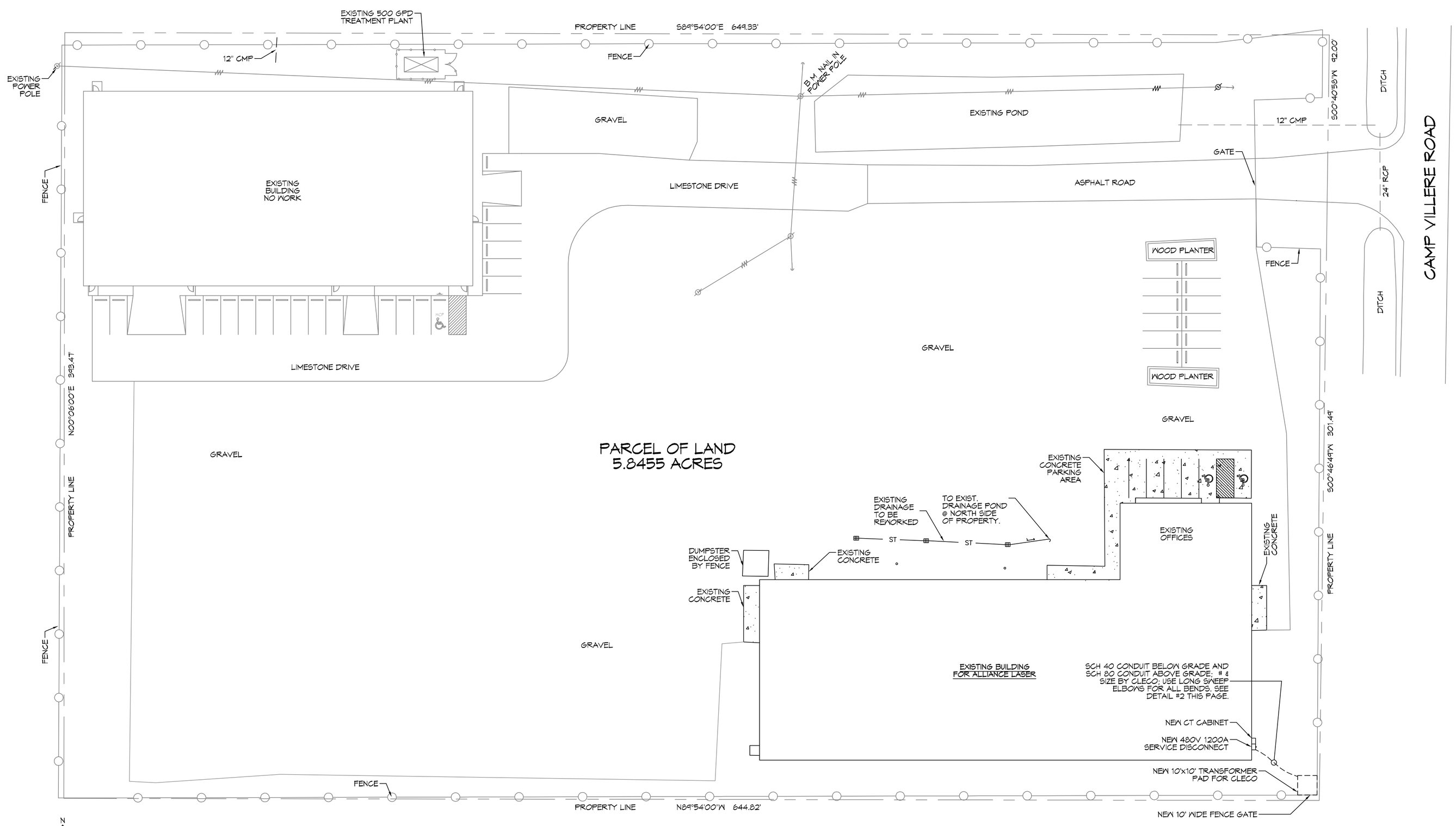

1 SITE PLAN
SCALE: 1" = 30'-0"

DAMMON ENGINEERING, INC.
LOUISIANA & MISSISSIPPI
www.dammoneningineering.com
info@dammoneningineering.com
PH: 985.649.5832

Chief Engineer: Brian Mistich, PE
554 Old Spanish Trail
Slidell, LA 70458

REVISIONS

#	DESCRIPTION	DATE

SEAL:

STATE OF LOUISIANA
BRIAN A. MISTICH
License No. 30187
PROFESSIONAL ENGINEER

RENOVATIONS AND ADDITIONS FOR ALLIANCE LASER

6420 CAMP VILLERE ROAD
SLIDELL, LA 70460

JOB No:	2298	DATE:	01-17-17
DRAWN BY:	CKD	CHECKED BY:	CKD

This drawing, as an instrument, origin and arrangement constitutes an original work of Dammon Engineering, Inc. and shall remain the property of Dammon Engineering, Inc. The reproduction, alteration, or publication of this drawing, in whole or in part, without the express consent of Dammon Engineering, Inc. is prohibited. Copyright © 2016 Dammon Engineering, Inc. All rights reserved.

SHEET TITLE:
SITE PLAN

DRAWING NUMBER:
C101

SHEET No: 3 of 11

FILE NAME: J:_INDUSTRIAL SITES\2298 - Alliance Laser\Drawings\Civil\Site Plan.dwg PLOT DATE & TIME: Wednesday, February 22, 2017 2:50:00 PM