PANEL SCHEDULE

PANEL: MDP PANEL
LOCATION: SOUTHEAST CORNER OF WAREHOUSE
FEEDER SOURCE: CLSCO
VOLTAGE: 277/480V, 1,200A, 3Ø, 4W A/W/G
ENCLOSURE: SURFACE MOUNTED W/ EQUIPMENT GND BAR SQ D TYPE QO PANELBOARD

CKT NO	THWN WIRE SIZE	LOAD DESCRIPTION LOCATION	BREAKER AMP	BREAKER POLE	LOAD KVA	LOAD KVA	BREAKER POLE	BREAKER AMP	LOAD DESCRIPTION LOCATION	THWN WIRE SIZE	CKT NO
1	2-400	PANELBOARD P1-480V	600	3	143.4	161.0	3	600	PANELBOARD P2-480V	2-400	2
3					141.6	160.7					4
5					141.0	161.5					6
7	#4	TRANSFORMER T-3 (45kva) OFFICE PANEL P3-208V	70	3	21.3	40.8	3	170	TRANSFORMER T-4 (112.5 kva) FEEDS PANEL P4-208V	3/0	8
9					19.0	48.0					10
11					14.8	48.1					12
13	#12	WAREHOUSE LIGHTS - SOUTH ROWS	20	1	3.6	-	1	20	SPARE	-	14
15	#12	WAREHOUSE LIGHTS - CENTER ROWS	20	1	3.6	-	1	20	SPARE	-	16
17	#12	WAREHOUSE LIGHTS - NORTH ROWS	20	1	3.6	-	1	20	SPARE	-	18

SOLID NEUTRAL NEUTRAL WIRE (N)

TOTAL CONNECTED LOAD (KVA) = 1,117.2 kva

AØ	BØ	CØ
= 370.8 kva	= 374.7 kva	= 374.0 kva

GROUND BUS GROUND WIRE (G)

PANEL SCHEDULE

PANEL: P4-208V (NEW)
LOCATION: INSIDE OF SOUTHEAST HALL OF WAREHOUSE
FEEDER SOURCE: TRANSFORMER T4 LINKED TO MDP PANEL
VOLTAGE: 120/208V, 400A, 3Ø, 4W A/W/G
ENCLOSURE: FLUSH MOUNTED W/ EQUIPMENT GND BAR SQ D TYPE QO PANELBOARD

CKT NO	THWN WIRE SIZE	LOAD DESCRIPTION LOCATION	BREAKER AMP	BREAKER POLE	LOAD KVA	LOAD KVA	BREAKER POLE	BREAKER AMP	LOAD DESCRIPTION LOCATION	THWN WIRE SIZE	CKT NO
1	#10	EXISTING WAREHOUSE FANS - EAST	30	3	2.4	2.4	3	30	EXISTING WAREHOUSE FANS - WEST	#10	2
3					2.4	2.4					4
5					2.4	2.4					6
7	#10	EXISTING ROLLUP DOOR	20	2	1.7	1.7	2	20	EXISTING ROLLUP DOOR	#10	8
9					1.7	1.7					10
11	#3	FADAL 3019 DISCONNECT-NEW	40	3	8.0	8.0	3	60	FADAL 4525 DISCONNECT-NEW	#3	12
13					8.0	8.0					14
15					8.0	8.0					16
17	1/0	HAASCON DISCONNECT-NEW	120	3	12.0	4.6	3	100	HAAS ST30Y DISCONNECT-NEW	#2	18
19					12.0	4.6					20
21					12.0	4.6					22
23	#12	KNEE MILL DISCONNECT-NEW	20	3	1.6	1.6	1	20	RECEPTACLES-EXISTING	#12	24
25					1.6	1.6	1	20	SWITCHES FOR CONTACTOR-EXISTING	#12	26
27					1.6	1.6	1	20	RECEPTACLES-EXISTING	#12	28
29	-	CONTACTOR-EXISTING	20	1	1.6	0.4	1	20	110V RECEPTACLES ON EAST AND SOUTH WALLS OF WAREHOUSE	#12	30
31	-	SPARE	20	1	-	-	1	20	SPARE	-	32
33	-	SPARE	20	1	-	-	1	20	SPARE	-	34
35	-	SPARE	20	1	-	-	1	20	SPARE	-	36
37	-	SPARE	20	1	-	-	1	20	SPARE	-	38
39	-	SPACE	-	1	-	-	1	-	SPACE	-	40
41	-	SPACE	-	1	-	-	1	-	SPACE	-	42

SOLID NEUTRAL NEUTRAL WIRE (N)

TOTAL CONNECTED LOAD (KVA) = 145.1 kva

AØ	BØ	CØ
= 48.8 kva	= 48.8 kva	= 48.1 kva

GROUND BUS GROUND WIRE (G)

PANEL SCHEDULE

PANEL: P1-480V (NEW)
LOCATION: INSIDE OF SOUTHWEST CORNER OF WAREHOUSE
FEEDER SOURCE: CLSCO VIA MDP PANEL
VOLTAGE: 277/480V, 600A, 3Ø, 4W A/W/G
ENCLOSURE: SURFACE MOUNTED W/ EQUIPMENT GND BAR SQ D TYPE QO PANELBOARD

CKT NO	THWN WIRE SIZE	LOAD DESCRIPTION LOCATION	BREAKER AMP	BREAKER POLE	LOAD KVA	LOAD KVA	BREAKER POLE	BREAKER AMP	LOAD DESCRIPTION LOCATION	THWN WIRE SIZE	CKT NO
1	#3	WELDING MACHINE DISCONNECT #1	50	3	11.1	11.1	3	50	WELDING MACHINE DISCONNECT #2	#3	2
3					11.1	11.1					4
5					11.1	11.1					6
7	#3	WELDING MACHINE DISCONNECT #3	50	3	11.1	11.1	3	50	WELDING MACHINE DISCONNECT #4	#3	8
9					11.1	11.1					10
11					11.1	11.1					12
13	#3	WELDING MACHINE DISCONNECT #5	50	3	11.1	11.1	3	50	WELDING MACHINE DISCONNECT #6	#3	14
15					11.1	11.1					16
17					11.1	11.1					18
19	#10	1606 ACCUPRESS DISCONNECT	20	3	3.6	15.0	3	40	T-1 TRANSFORMER (30 kva) TO P1-208V PANELBOARD	#8	20
21					3.6	14.4					22
23					3.6	13.2					24
25	#12	FORKLIFT CHARGER DISCONNECT	10	3	1.4	15.5	3	70	TRUMPF V230 DISCONNECT	#3	26
27					1.4	15.5					28
29					1.4	15.5					30
31	-	NEW EXTERIOR LIGHTING OVER SANDBLASTING EQUIPMENT	20	1	0.9	-	1	20	SPARE	-	32
33	-	SPARE	20	1	-	-	1	20	SPARE	-	34
35	-	SPACE	-	1	-	-	1	-	SPACE	-	36
37	-	SPACE	-	1	-	-	1	-	SPACE	-	38
39	-	SPACE	-	1	-	-	1	-	SPACE	-	40
41	-	SPACE	-	1	-	-	1	-	SPACE	-	42

SOLID NEUTRAL NEUTRAL WIRE (N)

TOTAL CONNECTED LOAD (KVA) = 426.4 kva

AØ	BØ	CØ
= 140.4 kva	= 141.6 kva	= 141.0 kva

GROUND BUS GROUND WIRE (G)

PANEL SCHEDULE

PANEL: P2-480V (NEW)
LOCATION: INSIDE OF NORTH WAREHOUSE HALL
FEEDER SOURCE: CLSCO VIA MDP PANEL
VOLTAGE: 277/480V, 600A, 3Ø, 4W A/W/G
ENCLOSURE: SURFACE MOUNTED W/ EQUIPMENT GND BAR SQ D TYPE QO PANELBOARD

CKT NO	THWN WIRE SIZE	LOAD DESCRIPTION LOCATION	BREAKER AMP	BREAKER POLE	LOAD KVA	LOAD KVA	BREAKER POLE	BREAKER AMP	LOAD DESCRIPTION LOCATION	THWN WIRE SIZE	CKT NO
1	#10	PAINT BOOTH DISCONNECT	25	3	9.9	9.9	3	25	PAINT BOOTH DISCONNECT	#10	2
3					9.9	9.9					4
5					9.9	9.9					6
7	#8	CHILLER DISCONNECT	40	3	8.9	12.4	3	60	CHILLER DISCONNECT	#8	8
9					8.9	12.4					10
11					8.9	12.4					12
13	#10	DUST COLLECTOR DISCONNECT	20	3	4.1	1.7	3	10	DUST COLLECTOR DISCONNECT	#10	14
15					4.1	1.7					16
17					4.1	1.7					18
19	#8	SLIDSE COLLECTOR(S) DISCONNECT	40	3	8.9	18.6	3	50	480V COMPRESSOR DISCONNECT	#3	20
21					8.9	18.6					22
23					8.9	18.6					24
25	1/0	BYSTAR 3015 DISCONNECT	120	3	21.1	21.1	3	120	BYSTAR 3015 DISCONNECT	1/0	26
27					21.1	21.1					28
29					21.1	21.1					30
31	#8	TUMBLER DISCONNECT	40	3	8.1	21.1	3	120	BYJET SMART 3015 DISCONNECT	1/0	32
33					8.1	21.1					34
35					8.1	21.1					36
37	#8	T-2 TRANSFORMER (30 kva) TO P2-208V PANELBOARD	40	3	9.9	1.8	1	20	NEW EXTERIOR LIGHTING OVER EQUIPMENT	#12	38
39					11	-	1	-	SPACE	-	40
41					11.6	-	1	-	SPACE	-	42

SOLID NEUTRAL NEUTRAL WIRE (N)

TOTAL CONNECTED LOAD (KVA) = 483.2 kva

AØ	BØ	CØ
= 161.0 kva	= 160.7 kva	= 161.5 kva

GROUND BUS GROUND WIRE (G)

PANEL SCHEDULE

PANEL: OFFICE PANEL P3 (EXISTING)
LOCATION: INSIDE OF NORTHEAST CORNER OF WAREHOUSE
FEEDER SOURCE: TRANSFORMER T-3 LINKED TO MDP PANEL
VOLTAGE: 120/208V, 200A, 3Ø, 4W A/W/G
ENCLOSURE: FLUSH MOUNTED W/ EQUIPMENT GND BAR SQ D TYPE QO PANELBOARD

CKT NO	THWN WIRE SIZE	LOAD DESCRIPTION LOCATION	BREAKER AMP	BREAKER POLE	LOAD KVA	LOAD KVA	BREAKER POLE	BREAKER AMP	LOAD DESCRIPTION LOCATION	THWN WIRE SIZE	CKT NO
1	-	Office Receptacles	20	1	1.2	1.2	1	20	OFFICE LIGHTS	-	2
3	-	Office Receptacles	20	1	1.2	1.2	1	20	OFFICE LIGHTS	-	4
5	-	Office Receptacles	20	1	1.2	1.2	1	20	MAN OFFICE LIGHTS	-	6
7	-	Office Receptacles	20	1	1.2	4.8	2	60	HVAC AHU	-	8
9	-	Kitchen	20	1	1.5	4.8					10
11	-	Kitchen	20	1	1.9	4.8	2	60	HVAC AHU	-	12
13	-	Phone Room + Server Receptacles	20	1	1.0	4.8					14
15	-	Office Receptacles	20	1	1.2	-	1	-	SPACE	-	16
17	-	Refrigerator	20	1	1.0	-	1	-	SPACE	-	18
19	-	Bathroom GFCIs	20	1	0.9	-	1	-	SPACE	-	20
21	-	Office Receptacles	20	1	1.2	-	1	-	SPACE	-	22
23	-	Exit and Emergency Lights	20	1	1.0	-	1	-	SPACE	-	24
25	-	Office 1,2,3 Lights	20	1	1.2	-	1	-	SPACE	-	26
27	-	Hot Water Heater	30	2	1.7	-	1	-	SPACE	-	28
29					1.7	-	1	-	SPACE	-	30
31	-	HVAC CONDENSER 3-TON HEAT PUMP	40	2	2.2	-	1	-	SPACE	-	32
33					2.2	-	1	-	SPACE	-	34
35	-	HVAC CONDENSER 3.5-TON HEAT PUMP	40	2	2.4	-	1	-	SPACE	-	36
37					2.4	-	1	20	SPARE	-	38
39	-	SPACE	-	1	-	-	1	20	SPARE	-	40
41	-	SPACE	-	1	-	-	1	20	SPARE	-	42

SOLID NEUTRAL NEUTRAL WIRE (N)

TOTAL CONNECTED LOAD (KVA) = 51.1 kva

AØ	BØ	CØ
= 21.3 kva	= 19.0 kva	= 14.8 kva

GROUND BUS GROUND WIRE (G)

PANEL SCHEDULE

PANEL: P1-208V (NEW)
LOCATION: SOUTHWEST CORNER HALL OF WAREHOUSE
FEEDER SOURCE: TRANSFORMER T1 LINKED TO PANEL P1-480V
VOLTAGE: 120/208V, 125A, 3Ø, 4W A/W/G
ENCLOSURE: FLUSH MOUNTED W/ EQUIPMENT GND BAR SQ D TYPE QO PANELBOARD

CKT NO	THWN WIRE SIZE	LOAD DESCRIPTION LOCATION	BREAKER AMP	BREAKER POLE	LOAD KVA	LOAD KVA	BREAKER POLE	BREAKER AMP	LOAD DESCRIPTION LOCATION	THWN WIRE SIZE	CKT NO
1	#12	220V RECEPTACLE ON SOUTH WALL OF WAREHOUSE AT THE WELDING MACHINES	20	2	1.7	1.1	2	20	220V RECEPTACLE ON SOUTH WALL OF WAREHOUSE AT THE WELDING MACHINES	#12	2
3					1.7	1.1					4
5	#12	220V RECEPTACLE ON SOUTH WALL OF WAREHOUSE AT THE WELDING MACHINES	20	2	1.7	0.3	1	20	110V RECEPTACLES ON SOUTH WALL OF WAREHOUSE	#12	6
7					1.7	0.4	1	20	110V RECEPTACLES ON WEST WALL OF WAREHOUSE	#12	8
9	#3	TIMESAVER DISCONNECT	70	3	9.9	1.8	3	20	DUST COLLECTOR DISCONNECT	#10	10
11					9.9	1.8					12
13					9.9	1.8					14
15	#10	SANDBLASTER DISCONNECT	10	2	0.7	4.4	3	45	SAW DISCONNECT	#6	16
17					0.7	4.4					18
19						4.4					20
21	#12	110V RECEPTACLES ON WEST WALL OF WAREHOUSE	20	1	0.3	-	1	20	SPARE	-	22
23	#12	110V RECEPTACLES ON SOUTH WALL OF WAREHOUSE	20	1	0.3	0.3	1	20	110V RECEPTACLES ON SOUTH WALL OF WAREHOUSE	#12	24
25	#12	110V RECEPTACLES ON SOUTH WALL OF WAREHOUSE	20	1	0.5	-	1	20	SPARE	-	26
27	-	SPACE	-	1	-	-	1	20	SPARE	-	28
29	-	SPACE	-	1	-	-	1	20	SPARE	-	30
31	-	SPACE	-	1	-	-	1	20	SPARE	-	32

SOLID NEUTRAL NEUTRAL WIRE (N)

TOTAL CONNECTED LOAD (KVA) = 43.6 kva

AØ	BØ	CØ
= 15.8 kva	= 14.4 kva	= 13.9 kva

GROUND BUS GROUND WIRE (G)

PANEL SCHEDULE

PANEL: P2-208V (NEW)
LOCATION: INSIDE OF NORTH WAREHOUSE HALL
FEEDER SOURCE: TRANSFORMER T-2 LINKED TO PANEL P2-480V
VOLTAGE: 120/208V, 125A, 3Ø, 4W A/W/G
ENCLOSURE: FLUSH MOUNTED W/ EQUIPMENT GND BAR SQ D TYPE QO PANELBOARD

CKT NO	THWN WIRE SIZE	LOAD DESCRIPTION LOCATION	BREAKER AMP	BREAKER POLE	LOAD KVA	LOAD KVA	BREAKER POLE	BREAKER AMP	LOAD DESCRIPTION LOCATION	THWN WIRE SIZE	CKT NO
1	#12	110V RECEPTACLES ON NORTH WALL OF WAREHOUSE (STD 5 GFI)	20	1	0.7	0.4	2	10	DRYER DISCONNECT	#10	2
3	#3	220V COMPRESSOR DISCONNECT	60	2	6.2	0.4					4
5					6.2	1.7	2	20	220V RECEPTACLE ON NORTH WALL OF WAREHOUSE BETWEEN THE TWO BYSTAR 3015 EQUIP.	#12	6
7	#12	TRIFECTA	20	1	1.0	1.7					8
9	-	SPARE	20	1	-	-	1	20	SPARE	-	10
11	-	SPARE	20	1	-	-	1	20	SPARE	-	12
13	#12	110V RECEPTACLES ON NORTH WALL OF WAREHOUSE (STD 5 GFI)	20	1	0.7	-	1	20	SPARE	-	14
15	-	SPARE	20	1	-	-	1	20	SPARE	-	16
17	-	SPARE	20	1	-	-	1	20	SPARE	-	18

SOLID NEUTRAL NEUTRAL WIRE (N)

TOTAL CONNECTED LOAD (KVA) = 20.8 kva

AØ	BØ	CØ
= 9.8 kva	= 7.1 kva	= 7.9 kva

GROUND BUS GROUND WIRE (G)

1 CIRCUIT PANEL SCHEDULES

SCALE: N. T. S.

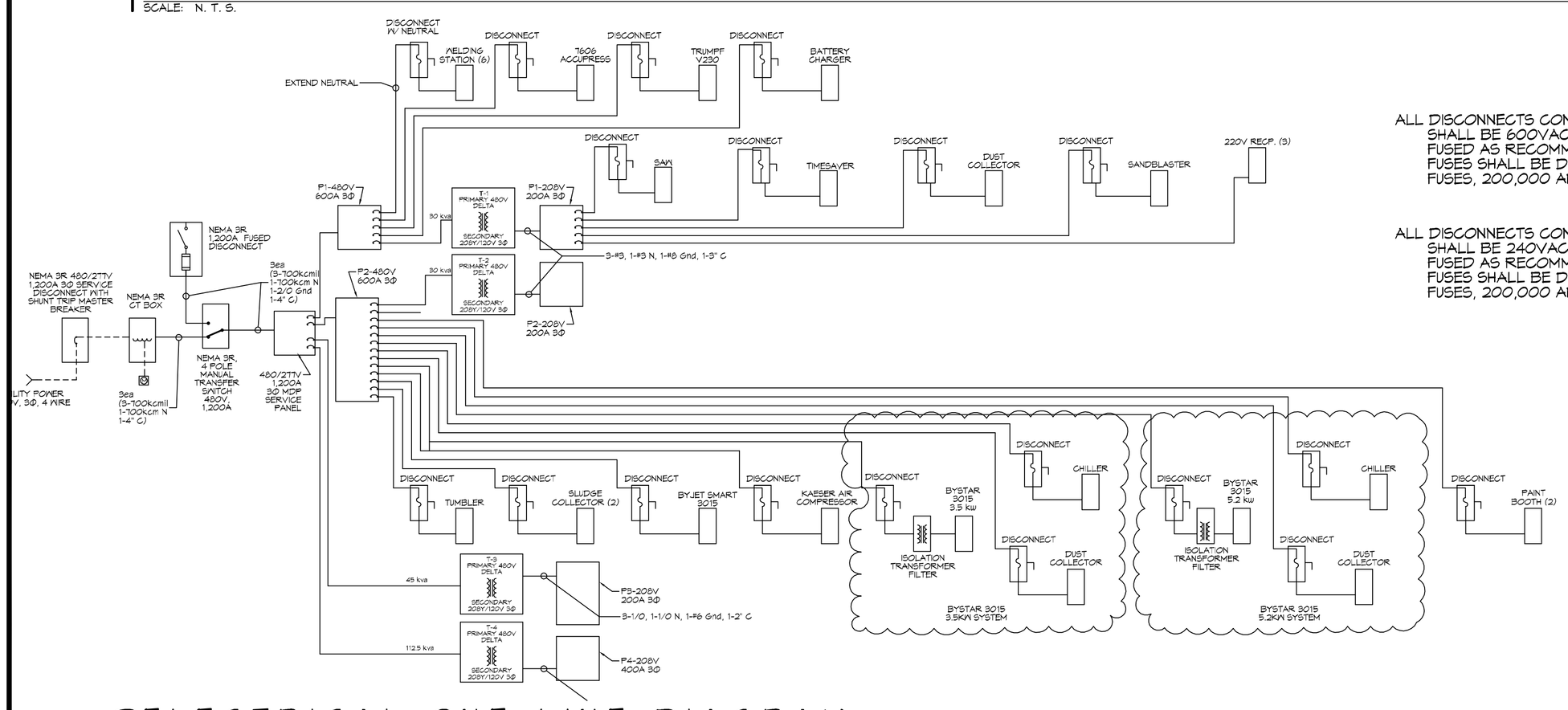

2 ELECTRICAL ONE-LINE DIAGRAM

SCALE: N. T. S.

ALL DISCONNECTS CONNECTED TO 480V PANELS SHALL BE 600VAC INDUSTRIAL GRADE AND FUSED AS RECOMMENDED BY MANUFACTURER. FUSES SHALL BE DUAL ELEMENT TIME DELAY FUSES, 200,000 AMP INTERRUPTING CAP.

ALL DISCONNECTS CONNECTED TO 208V PANELS SHALL BE 240VAC INDUSTRIAL GRADE AND FUSED AS RECOMMENDED BY MANUFACTURER. FUSES SHALL BE DUAL ELEMENT TIME DELAY FUSES, 200,000 AMP INTERRUPTING CAP.

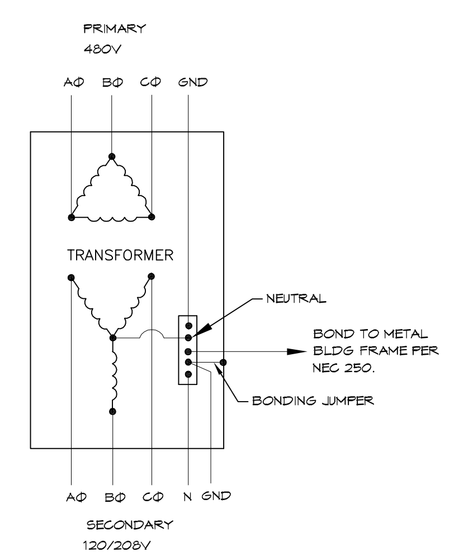

TRANSFORMER NOTES:

TRANSFORMERS SHALL BE A 480V DELTA - 208Y/120V DRY TYPE WITH NEMA 1 ENCLOSURE MOUNT TRANSFORMERS ABOVE POWER PANEL ON SHELF UNLESS OTHERWISE NOTED.

3 TRANSFORMER DETAIL

SCALE: N. T. S.

DAMMON ENGINEERING, INC.
LOUISIANA & MISSISSIPPI
www.dammonengineering.com
info@dammonengineering.com
PH: 985.649.5832
Chief Engineer: Brian Mistich, PE
554 Old Spanish Trail
Slidell, LA 70458

#	DESCRIPTION	DATE

REVISIONS

SEAL:

STATE OF LOUISIANA
BRIAN A. MISTICH
License No. 30187
PROFESSIONAL ENGINEER

RENOVATIONS AND ADDITIONS FOR
ALLIANCE LASER
60207 CAMP VILLERE ROAD
SLIDELL, LA 70460

This plan, drawing, specification, digital data and documentation remains the property of Dammon Engineering, Inc. and may not be used for any purpose other than the specific project for which it was prepared without the written consent of Dammon Engineering. Visual contact with these drawings & specifications shall constitute acceptance of the above restrictions.

JOB No:	2298
DATE:	01-17-17
DRAWN BY:	JTL/DDP
CHECKED BY:	CKD

SHEET TITLE:
ELECTRICAL CIRCUIT PANELS & ONE-LINE DIAGRAM

DRAWING NUMBER:

E103

SHEET No: 11 of 11

FILE NAME: J:_INDUSTRIAL SITES\2298 - Alliance Laser\Drawings\Current Drawings\01-17-17 - Electrical Circuit Panels.dwg BLUE DATE & TIME: Wednesday, February 22, 2017 3:29:13 PM