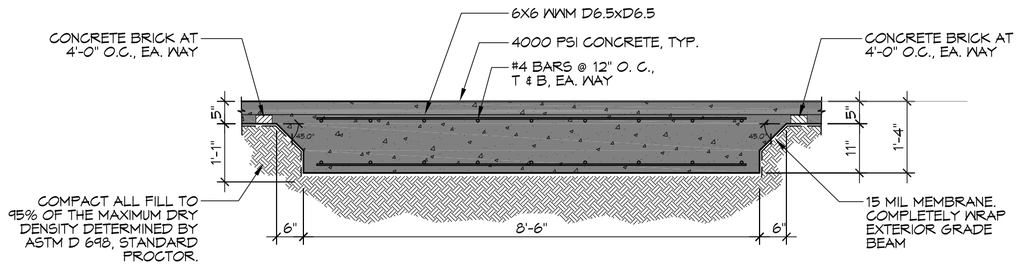

F S102|S101 **DETAIL**
SCALE: 1/2" = 1'-0" SPREAD FOOTING FOR VS-SERIES TANKS

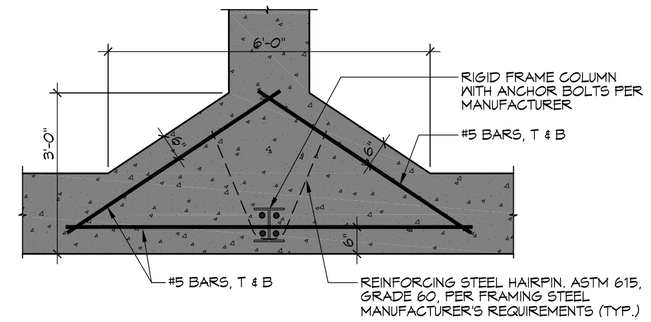

E S102|S101 **DETAIL**
SCALE: 1/2" = 1'-0" FOOTING PLAN AT COLUMNS

SITE PREP NOTES

1. REMOVE EXISTING SURFACE SOIL TO A DEPTH OF 1 FT. AND REPLACE WITH STRUCTURAL FILL. PROOF-ROLL WITH A RUBBER TIRED VEHICLE WEIGHING 20 TONS.
2. THE ENGINEER IS NOT RESPONSIBLE FOR SUBSURFACE CONDITIONS ENCOUNTERED IN THE FIELD CONTRARY TO THOSE ASSUMED FOR DESIGN. FOUNDATIONS ARE DESIGNED FOR AN ALLOWABLE SOIL BEARING CAPACITY OF 1,600 PSF. AS RECOMMENDED BY GEOTECHNICAL TESTING LABORATORY INC. REPORT DATED 3/17/97.
3. STRUCTURAL (A4 SELECT) FILL SHALL BE INSTALLED IN 6" LIFTS. IT SHALL BE COMPACTED TO 95% OF MAXIMUM DRY DENSITY AS DETERMINED BY ASTM D-698 STANDARD PROCEDURE.
6. OWNER SHALL RETAIN AN INDEPENDENT GEOTECHNICAL ENGINEER FOR TESTING COMPACTION AND TO INSPECT ALL FOOTING AND SLAB SUBGRADES. TEST AND INSPECTION RESULTS SHALL BE REPORTED IN WRITING TO THE ENGINEER AND CONTRACTOR WITHIN 24 HOURS AFTER TESTS ARE MADE. ANY RETESTING OR ADDITIONAL WORK REQUIRED DUE TO IMPROPERLY COMPACTED FILL SHALL BE DONE BY THE CONTRACTOR.
7. TREAT SOIL BELOW FOR TERMITES.

GENERAL FOUNDATION NOTES

1. ALL DIMENSIONS ARE EDGE OF CONCRETE (EOC) TO EDGE OF CONCRETE (EOC) UNLESS NOTED OTHERWISE.
2. CONCRETE MIX SHALL HAVE A MINIMUM COMPRESSIVE STRENGTH OF 4000 PSI AT 28 DAYS. CONCRETE MIX SHALL BE IN ACCORDANCE WITH ACI-318.
3. CURING COMPOUND SHALL MEET ASTM C-309 WITH A MINIMUM OF 30% SOLIDS CONTENT BY VOLUME.
4. CONCRETE TEST CYLINDERS AND SLUMP TESTS ARE TO BE MADE FOR EACH 100 CUBIC YARDS OR FRACTION THEREOF, OR FOR EACH 5,000 S.F. OF SURFACE AREA PLACED. TEST RESULTS SHALL BE REPORTED IN WRITING TO THE ENGINEER WITHIN 48 HOURS AFTER TESTS AREA MADE. ACCEPTABLE SLUMPS SHALL BE 3" TO 4".
5. ALL CONVENTIONAL REINFORCING STEEL SHALL MEET ASTM-A615 REQUIREMENTS (GRADE 60).
6. ONE LAYER OF POLYETHYLENE VAPOR BARRIER SHALL BE PLACED UNDER ALL CONCRETE. VAPOR RETARDER TO BE MINIMUM 15 MIL. THICKNESS; ASTM E 1745 CLASS A, PERMEANCE LESS THAN 0.01 PERMS, EQUAL TO STEGO INDUSTRIES STEGO WRAP, ECOSHIELD-E 15 MIL BY EPRO, OR IRONBAR 15 BY FLATIRON FILMS. PROVIDE APPROPRIATE ACCESSORIES FOR A COMPLETE SYSTEM.
7. ALL REINFORCING STEEL AND MESH SHALL BE SECURELY SUPPORTED TO PREVENT BOTH VERTICAL AND HORIZONTAL MOVEMENT DURING CONCRETE PLACEMENT.
8. THE CONTRACTOR SHALL VERIFY ALL DROPS, OFFSETS, LEDGES, DIMENSIONS AND CONFIGURATIONS. CONTRACTOR MUST BE RESPONSIBLE FOR SAME.
9. GRADE BEAM DIMENSIONS MAY VARY BY -5%, +20%.
10. ALL RUNOFF WATER MUST BE CARRIED AWAY FROM THE SLAB TO PREVENT SATURATION OF THE SUB-BASE.
11. PROVIDE AND MAINTAIN IMMEDIATE SITE DRAINAGE BEFORE, DURING, AND AFTER CONSTRUCTION. PROVIDE GRADING, SWELLS, AND SUMP PUMPS AS MAY BE REQUIRED TO IMMEDIATELY DRAIN ALL RAINWATER FROM THE CONSTRUCTION AREA. FOOTING EXCAVATIONS SHALL BE OBSERVED AND CONCRETE PLACED AS QUICKLY AS POSSIBLE TO AVOID EXPOSURE OF THE FOOTING BOTTOMS TO WETTING AND DRYING. STANDING WATER SHALL NOT BE ALLOWED TO SOAK INTO THE FOOTINGS. SURFACE RUNOFF WATER SHALL BE DRAINED AWAY FROM THE EXCAVATIONS AND NOT BE ALLOWED TO POND PRIOR TO OR AFTER CONCRETE PLACEMENT. IF IT IS REQUIRED THAT ANY FOOTING EXCAVATIONS BE LEFT OPEN FOR MORE THAN ONE DAY, THEY SHOULD

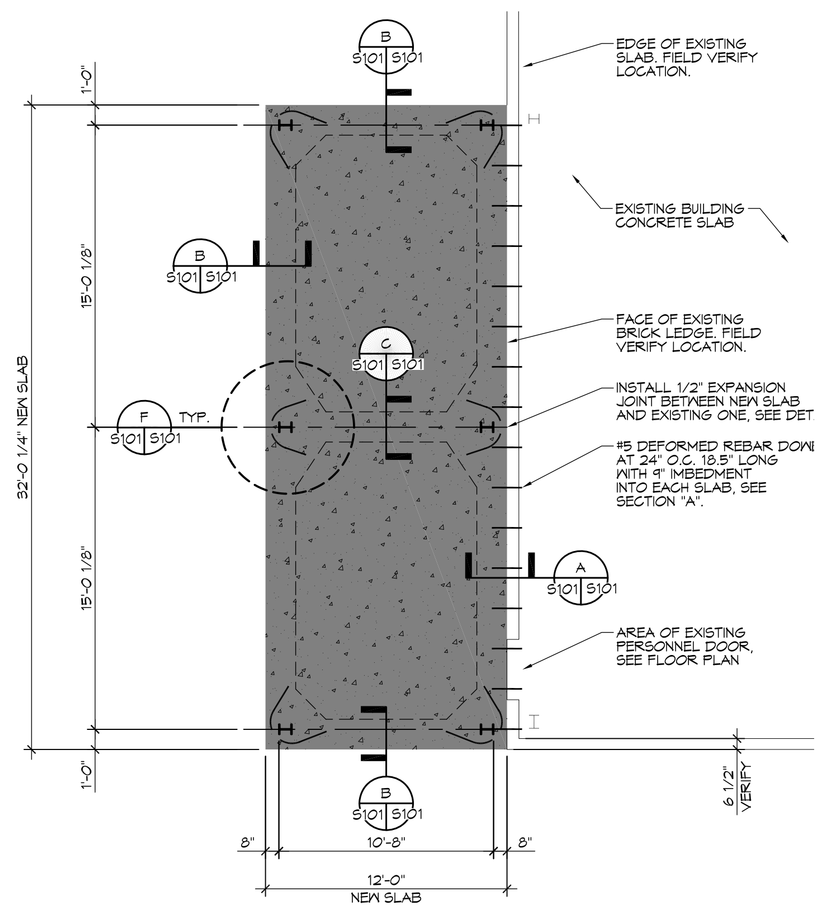

N

2 **FOUNDATION PLAN**
SCALE: 3/16" = 1'-0" SMALLER FOUNDATION AT BLOWER

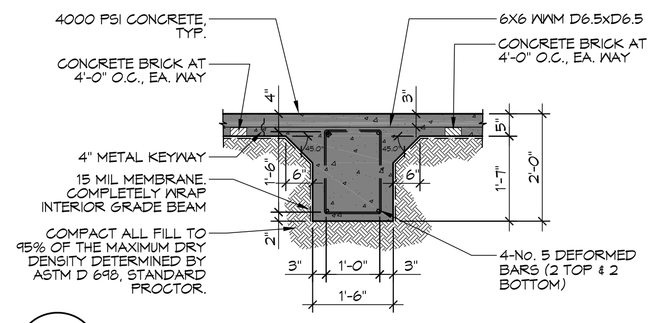

C S102|S101 **DETAIL**
SCALE: 1/2" = 1'-0" AT INNER GRADE BEAMS

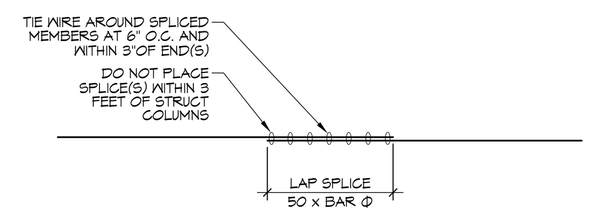

D S102|S101 **DETAIL**
SCALE: N.T.S. TYP. SPLICE DETAIL

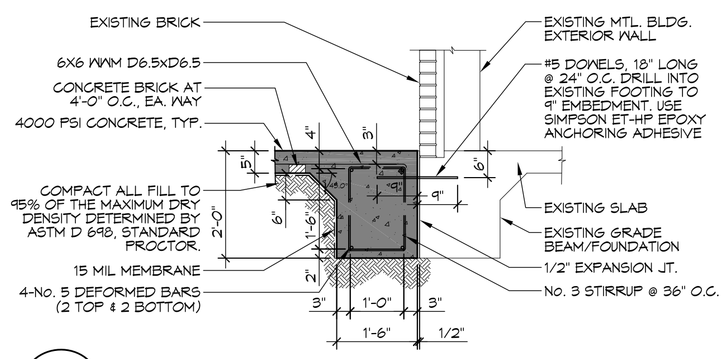

A S102|S101 **DETAIL**
SCALE: 1/2" = 1'-0" NEXT TO BLDG.

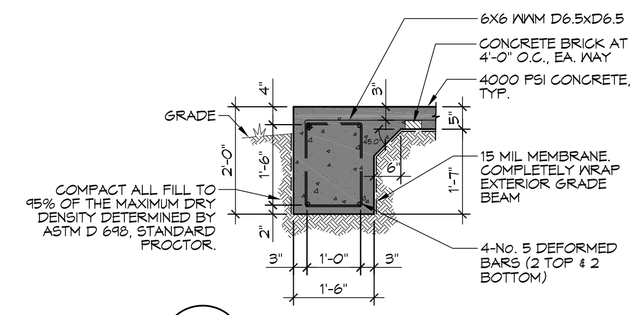

B S102|S101 **DETAIL**
SCALE: 1/2" = 1'-0" AT TYP. SLAB EDGE

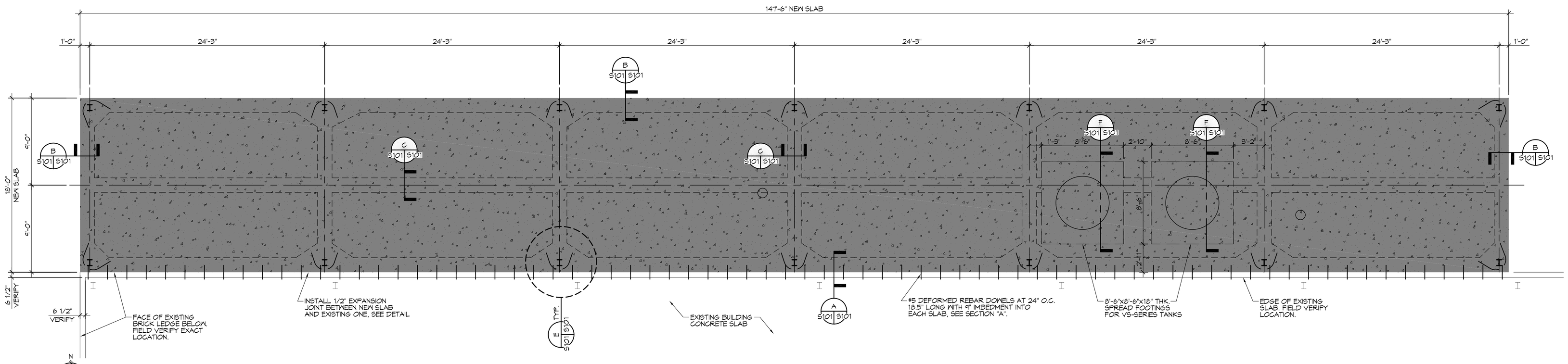

N

1 **FOUNDATION PLAN**
SCALE: 3/16" = 1'-0" LARGE FOUNDATION AT PAINT BOOTH

DAMMON ENGINEERING, INC.
LOUISIANA & MISSISSIPPI
www.dammonengineering.com
info@dammonengineering.com
PH: 985.649.5832
Chief Engineer: Brian Mistich, PE
554 Old Spanish Trail
Slidell, LA 70458

#	DESCRIPTION	DATE

REVISIONS

SEAL:

RENOVATIONS AND ADDITIONS FOR
ALLIANCE LASER
6020 CAMP VILLERE ROAD
SLIDELL, LA 70460

This above drawings and specifications, designs and arrangements represented thereby are and shall remain the property of Dammon Engineering, Inc. and shall not be loaned, copied or disclosed to others, or used in connection with any work or project other than the specified project for which they have been prepared and developed without the written consent of Dammon Engineering, Inc. Visual contact with these drawings or specifications shall constitute conclusive evidence of acceptance of these restrictions.

JOB No:	2298
DATE:	01-17-17
DRAWN BY:	JTL
CHECKED BY:	CAD

SHEET TITLE:
FOUNDATION PLAN

DRAWING NUMBER:
S101

SHEET No: - of #