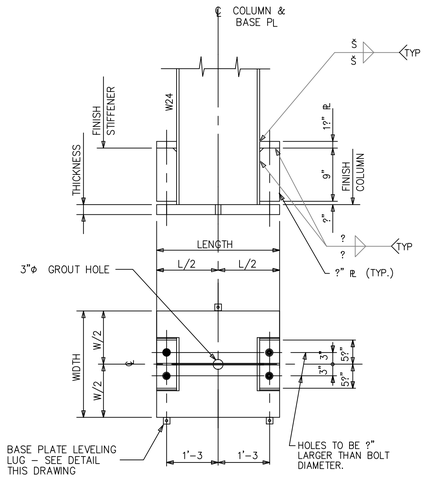

BASE PLATE DETAIL

TYPE "A"

RUST MANDATED

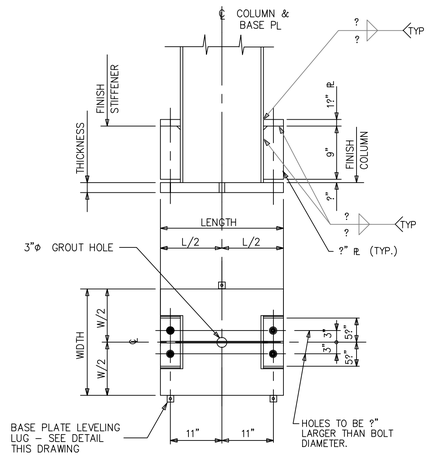

BASE PLATE DETAIL

TYPE "C"

RUST MANDATED

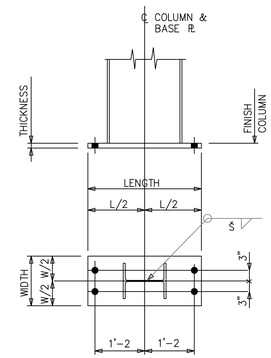

BASE PLATE DETAIL

TYPE "E"

RUST MANDATED

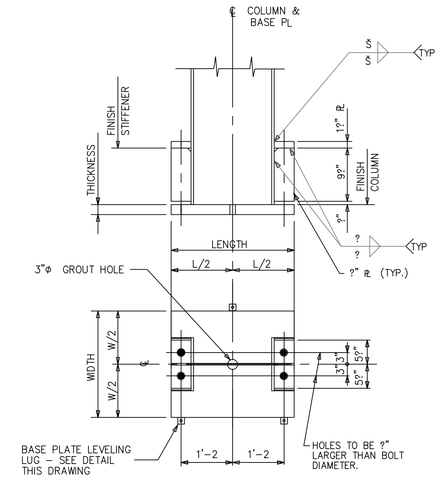

BASE PLATE DETAIL

TYPE "G"

RUST MANDATED

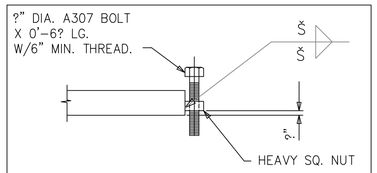

BASE PLATE LEVELING DETAIL

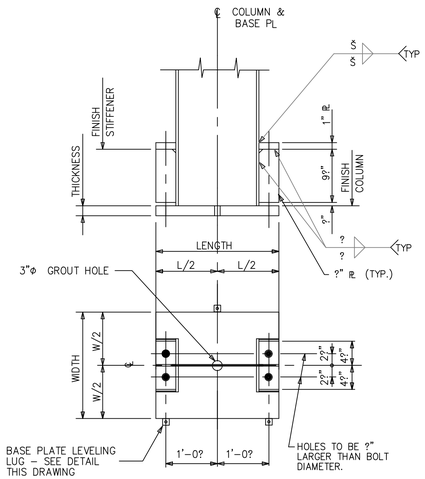

BASE PLATE DETAIL

TYPE "B"

RUST MANDATED

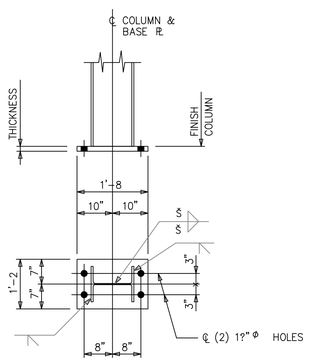

BASE PLATE DETAIL

TYPE "D"

RUST MANDATED

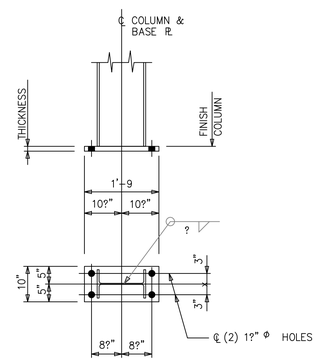

BASE PLATE DETAIL

TYPE "F"

RUST MANDATED

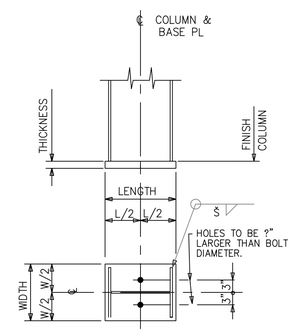

BASE PLATE DETAIL

TYPE "H"

RUST MANDATED

DAMMON ENGINEERING, INC.

LOUISIANA & MISSISSIPPI

www.dammonengineering.com
info@dammonengineering.com
PH: 985.649.5832

Chief Engineer: Brian Mistich, PE
564 Kelly Scott Trail
Slidell, LA 70458

#	DESCRIPTION	DATE

REVISIONS

SEAL:

NEW CRANE

CHEVRON

FOURCHON LA

JOB No: 2472 DATE: 04-30-24

DRAWN BY: CKD CHECKED BY: BAM

THIS DRAWING IS THE PROPERTY OF DAMMON ENGINEERING, INC. AND MAY NOT BE REPRODUCED OR USED FOR OTHER PROJECTS EXCEPT BY AGREEMENT WITH DAMMON ENGINEERING, INC. THIS DRAWING IS LOANED FOR A LIMITED PURPOSE AND MUST BE RETURNED UPON REQUEST. ALL REPRODUCTIONS MUST BE RETURNED UPON COMPLETION OF THE WORK FOR WHICH THE WORK WAS PREPARED AND MUST NOT BE USED FOR ANY OTHER PURPOSE BY OTHERS WITHOUT WRITTEN CONSENT OF DAMMON ENGINEERING, INC.

SHEET TITLE:
BASE PLATE DETAILS

DRAWING NUMBER:

A102

SHEET No: 7 of 2

FILE NAME: J:\-- INDUSTRIAL SITES\Chevron Function Junction Supreme Group\Drawings\Current Drawings\A102 - Building Section.dwg PLOT DATE & TIME: Tuesday, April 30, 2024 13:30:14 PM