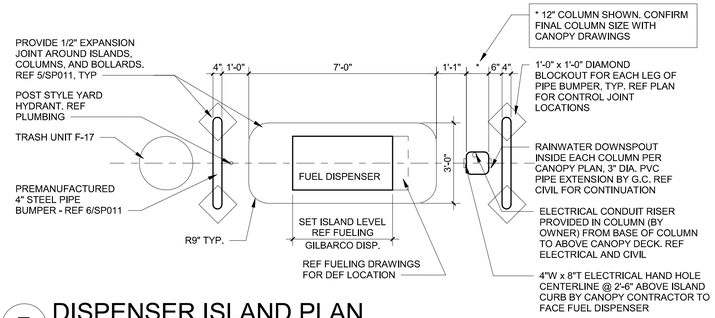

7 DISPENSER ISLAND PLAN
3/8" = 1'-0"

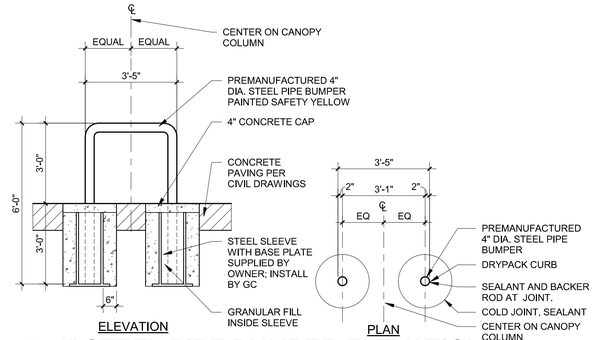

6 4" STEEL PIPE BUMPER ELEVATION
3/8" = 1'-0"

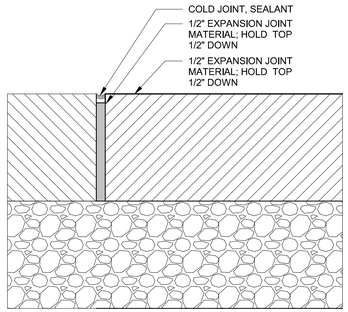

4 EXPANSION JOINT DETAIL
3" = 1'-0"

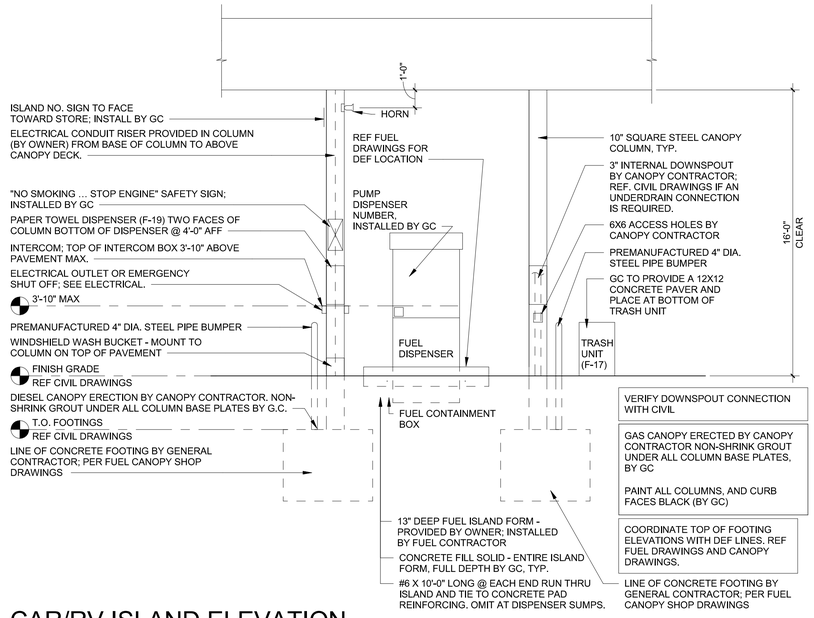

5 CAR/RV ISLAND ELEVATION
1/4" = 1'-0"

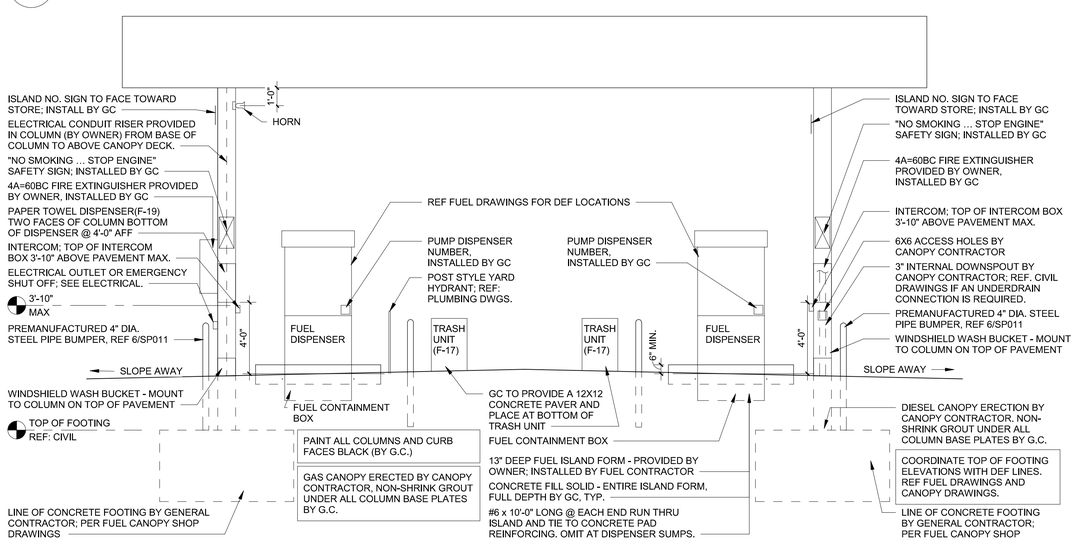

3 CAR ISLAND ELEVATION
1/4" = 1'-0"

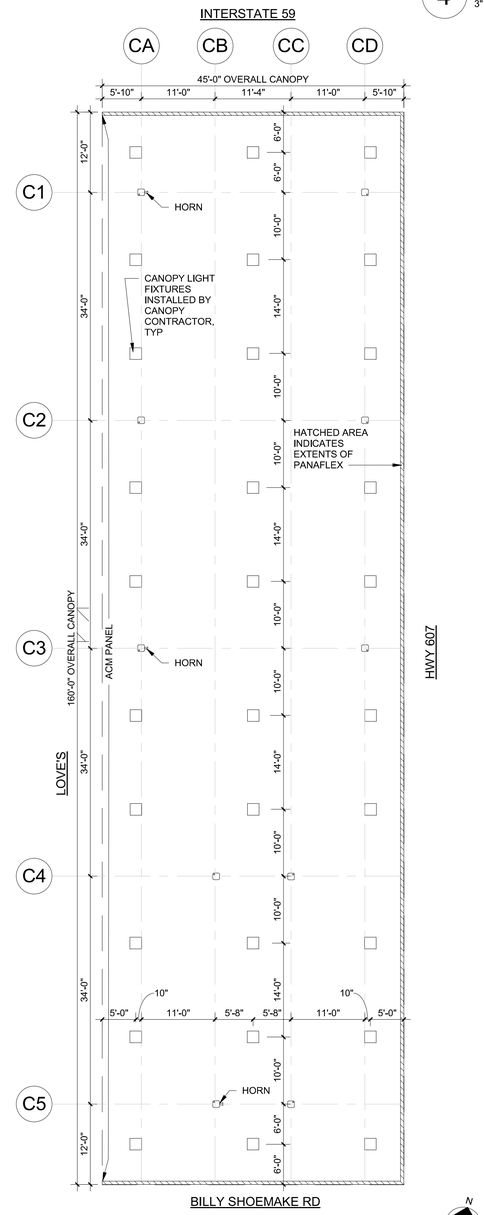

2 CAR CANOPY SOFFIT PLAN
3/32" = 1'-0"

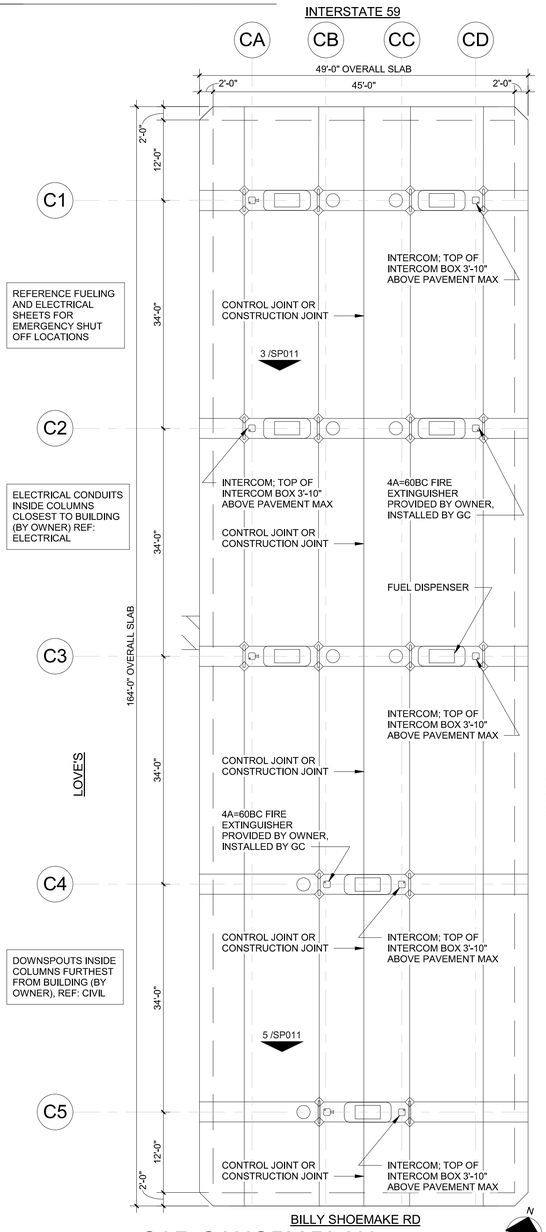

1 CAR CANOPY PLAN
3/32" = 1'-0"

HFA
HARRISON FRENCH & ASSOCIATES, PLLC
t 479.273.7780
1705 S. Walton Blvd., Suite 3
Bentonville, Arkansas 72712
www.hfa-ac.com

STIPULATION FOR REUSE
THIS DRAWING WAS PREPARED FOR USE IN CONNECTION WITH LOVE'S NICHOLSON, MS STORE NUMBER 0860 AT I-59, EXIT 1 NICHOLSON, MS (SITE) ON 03/09/23, AND IT IS NOT INTENDED FOR USE ON ANY OTHER PROJECT SITE OR AT A LATER TIME. THE REUSE OF THIS DRAWING WITHOUT PRIOR WRITTEN CONSENT BY HARRISON FRENCH AND ASSOCIATES, LTD. (HFA) AND THE LICENSED ARCHITECTS AND ENGINEERS OF RESPONSIBLE CHARGE IS PROHIBITED. REPRODUCTION OF THIS DRAWING FOR OTHER PROJECTS IS NOT LEGALLY AUTHORIZED AND MAY BE CONTRARY TO PL 108.

Love's
STORE NUMBER: 860
I-59, EXIT 1
NICHOLSON, MS 39466
JOB NUMBER: 03-23-30009
T1-180

ISSUE BLOCK

CHECKED BY:	MAP
DRAWN BY:	ASE
DOCUMENT DATE:	02/06/23
PROTO:	T1-180
PROTO CYCLE:	Q4 - 2022

REGISTERED ARCHITECT
BOGUE L. EBBRECHT
4925
STATE OF ARKANSAS
Bogue Louis Ebbrecht
Digitally signed by Bogue Louis Ebbrecht
DN: cn=Bogue Louis Ebbrecht, c=Harrison French and Associates, L=Bentonville, S=ARKANSAS, C=US
Date: 2023.02.07 15:50:08-06'00'

CAR CANOPY PLAN & DETAILS

SHEET:
SP011

3/6/2023 3:35:31 PM
C:\Users\mayssa.pranger\Documents\2021 Revit Projects\Loves_Nicholson_MS_ARC_T2_180_v21_HFA Mayssa Pranger.rvt
2022-SP011-CAR CANOPY PLAN & DETAILS