EXHAUST FAN INFORMATION – JOB#5853364

FAN UNIT NO	TAG	QTY	FAN UNIT MODEL #	MANUFACTURER	CFM	ESP	RPM	MOTOR ENCL	HP	BHP	PHASE	VOLT	FLA	DISCHARGE VELOCITY	WEIGHT (LBS)	SONES
1	GRILL HOOD	1	DU85HFA	CAPTIVEAIRE	1805	0.850	1281	ODP	0.750	0.4120	3	208	2.6	571 FPM	95	10.8
2	FRYER HOOD	1	DU85HFA	CAPTIVEAIRE	1805	1.100	1375	ODP	0.750	0.5100	3	208	2.6	571 FPM	95	12.1
3	BAKE HOOD	1	DU50HFA	CAPTIVEAIRE	1050	0.800	1380	ODP	0.500	0.2940	3	208	2.0	399 FPM	83	13

CONDENSER DETAIL – JOB#5853364

FAN UNIT NO	TAG	FAN UNIT MODEL #	CONDENSER NO	TONNAGE	VOLTAGE	PHASE	FREQUENCY	MCA	RLA	MAX FUSE SIZE	MIN WIRE SIZE	SEER
4		A2-E.452-20D-MPU	1	5	208-230	3 PHASE	60 HZ	21.4 AMPS	17.4 AMPS	30 AMPS	10 AWG	14

MUA FAN INFORMATION – JOB#5853364

FAN UNIT NO	TAG	QTY	FAN UNIT MODEL #	BLOWER	HOUSING	MIN CFM	DESIGN CFM	ESP	RPM	MOTOR ENCL	HP	BHP	PHASE	VOLT	FLA	MCA	MOCP	WEIGHT (LBS)	SONES
4		1	A2-E.452-20D-MPU	20MF-2-MOD	A2-E.452	2000	2378	0.500	1055	ODP,PREMIUM	2.000	0.6820	3	208	6.1	7.7A	15A	1344	7.5

COILS – JOB#5853364

FAN UNIT NO	TAG	COIL TYPE	DESIGN CFM	COOLING											HEATING								
				ENTERING DB TEMP	ENTERING WB TEMP	LEAVING DB TEMP	LEAVING WB TEMP	ENTERING FLUID TEMP	LEAVING FLUID TEMP	FLUID FLOW RATE	PERCENT GLYCOL	TOTAL CAPACITY	SENSIBLE CAPACITY	LATENT CAPACITY	ENTERING DB TEMP	LEAVING DB TEMP	ENTERING FLUID TEMP	LEAVING FLUID TEMP	FLUID FLOW RATE	PERCENT GLYCOL	STEAM PRESSURE	TOTAL CAPACITY	SENSIBLE CAPACITY
4		DX	2378	90.0°F	75.0°F	76.8°F	69.1°F	---	---	---	---	52.3 MBH	32.3 MBH	20.0 MBH	---	---	---	---	---	---	---	---	---

ELECTRIC MAKE-UP AIR – JOB#5853364

FAN UNIT NO	TAG	DSGN KW'S	MAX KW'S	PHASE	VOLTS	AMPERAGE	TEMP RISE	OUTPUT BTUs
4		31	45	3	208	108.3	40 °F	153585

FAN OPTIONS

FAN UNIT NO	TAG	QTY	DESCRIPTION
1	GRILL HOOD	1	GREASE BOX
		1	2 YEAR PARTS WARRANTY
2	FRYER HOOD	1	GREASE BOX
		1	2 YEAR PARTS WARRANTY
3	BAKE HOOD	1	GREASE BOX
		1	2 YEAR PARTS WARRANTY
4		1	MOTORIZED BACKDRAFT DAMPER FOR A2-D HOUSING - MEETS AMCA CLASS 1A RATING
		1	5 TON SINGLE CIRCUIT MODULAR PACKAGED COOLING OPTION FOR SIZE 2 DF/EH MUA (2,000 TO 3,000 CFM), 208V/230V, 3 PHASE. COOLING THERMOSTAT OR PROGRAMMABLE STAT REQUIRED FOR PROPER OPERATION
		1	DOWNTURN PLENUM FOR SIZE 2 DX COIL MODULE
		1	COOLING THERMOSTAT AND RELAY (NOT REQUIRED FOR EVAP)
		1	SEPARATE 120V WIRING PACKAGE (REQUIRED AND USED ONLY FOR DCV OR PREWIRE WITH VFD) - THREE PHASE ONLY
		1	EH 2 MUA CONTROLS SHEET METAL
		1	2 YEAR PARTS WARRANTY

FAN ACCESSORIES

FAN UNIT NO	TAG	EXHAUST			SUPPLY			
		GREASE CUP	GRAVITY DAMPER	WALL MOUNT	SIDE DISCHARGE	GRAVITY DAMPER	MOTORIZED DAMPER	WALL MOUNT
1	GRILL HOOD	YES						
2	FRYER HOOD	YES						
3	BAKE HOOD	YES						
4							YES	

CURB ASSEMBLIES

NO	ON FAN	TAG	WEIGHT	ITEM	SIZE
1	# 1	GRILL HOOD	49 LBS	CURB	23.000"W X 23.000"L X 28.000"H ALONG LENGTH, RIGHT VENTED HINGED.
2	# 2	FRYER HOOD	49 LBS	CURB	23.000"W X 23.000"L X 28.000"H ALONG LENGTH, RIGHT VENTED HINGED.
3	# 3	BAKE HOOD	40 LBS	CURB	19.500"W X 19.500"L X 28.000"H ALONG LENGTH, RIGHT VENTED HINGED.
4	# 4		96 LBS	RAIL	6.000"W X 31.000"L X 15.000"H RIGHT.
4	# 4		96 LBS	CURB	31.000"W X 79.000"L X 15.000"H ALONG WIDTH, RIGHT INSULATED.

FANS #1 (GRILL HOOD), #2 (FRYER HOOD) - DU85HFA EXHAUST FAN

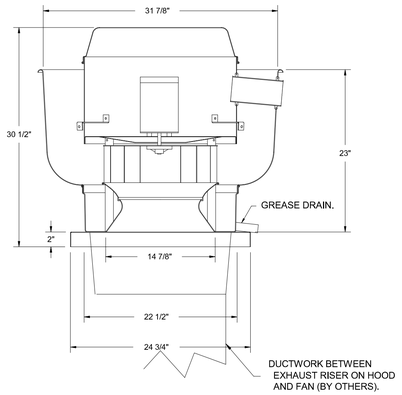

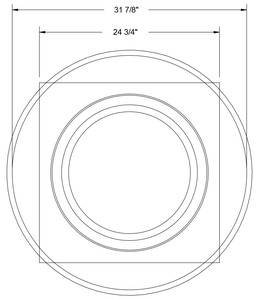

TOP VIEW

FEATURES:

- DIRECT DRIVE CONSTRUCTION (NO BELTS/PULLEYS).
- ROOF MOUNTED FANS.
- RESTAURANT MODEL.
- UL705 AND UL762 AND ULC-S645
- VARIABLE SPEED CONTROL.
- INTERNAL WIRING.
- THERMAL OVERLOAD PROTECTION (SINGLE PHASE).
- HIGH HEAT OPERATION 300°F (149°C).
- GREASE CLASSIFICATION TESTING.
- NEMA 3R SAFETY DISCONNECT SWITCH.

NORMAL TEMPERATURE TEST
EXHAUST FAN MUST OPERATE CONTINUOUSLY WHILE EXHAUSTING AIR AT 300°F (149°C) UNTIL ALL FAN PARTS HAVE REACHED THERMAL EQUILIBRIUM, AND WITHOUT ANY DETERIORATING EFFECTS TO THE FAN WHICH WOULD CAUSE UNSAFE OPERATION.

ABNORMAL FLARE-UP TEST
EXHAUST FAN MUST OPERATE CONTINUOUSLY WHILE EXHAUSTING BURNING GREASE VAPORS AT 600°F (316°C) FOR A PERIOD OF 15 MINUTES WITHOUT THE FAN BECOMING DAMAGED TO ANY EXTENT THAT COULD CAUSE AN UNSAFE CONDITION.

OPTIONS

- GREASE BOX.
- 2 YEAR PARTS WARRANTY.

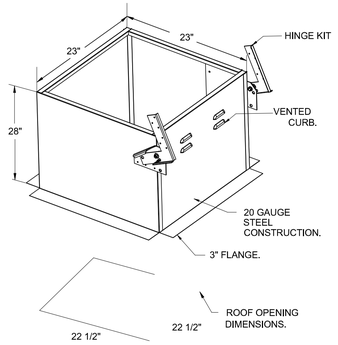

CAPTIVEAIRE

Charlotte/Piedmont

6303 Carmel Road, Suite 105, Charlotte, NC, 28226 PHONE: (704) 844-9088 FAX: (919) 227-5952 EMAIL: reg30@captiveaire.com

Love's Bojangles - Nicholson MS - Electric Heat

20 Hwy 607,
Nicholson, MS, 39463

2/10/2023

5853364

agrant

3/4" = 1'-0"

MASTER DRAWING

HFA
HARRISON FRENCH & ASSOCIATES, LTD

t 479.273.7780

1705 S. Walton Blvd., Suite 3
Bentonville, Arkansas 72712
www.hfa-ae.com

STIPULATION FOR REUSE

THIS DRAWING WAS PREPARED FOR USE ON A SPECIFIC SITE AT CONTEMPORANEOUS WITH ITS ISSUE BY HARRISON FRENCH & ASSOCIATES. SUITABLE FOR USE ON A DIFFERENT SITE OR AT A LATER DATE IS NOT THE USE OF THIS DRAWING FOR REFERENCE ONLY. REPRODUCTION OF THIS DRAWING REQUIRED THE SERVICES OF PROPERLY LICENSED PROFESSIONALS AND THE REPRODUCTION OF THIS DRAWING FOR REPRODUCTION BY OTHERS IS NOT AUTHORIZED AND MAY BE CONTRARY TO LAWS.

Love's

STORE NUMBER: 860
I-59, EXIT 1
NICHOLSON, MS 39466

JOB NUMBER: 03-23-30009

T1-90

ISSUE BLOCK		
1	ADD 1	02/16/23

CHECKED BY:	CAPTIVEAIRE
DRAWN BY:	CAPTIVEAIRE
DOCUMENT DATE:	2/7/2023
PROTO:	T1-90
PROTO CYCLE:	Q3 - 2022

FOR REFERENCE ONLY

CAPTIVEAIRE KITCHEN HOOD DETAIL

SHEET:
BGH103

2/10/2023 12:29:59 PM
C:\Users\agrant\Captiveaire\Captiveaire Documents\2021 Revit Projects\Love_Nicholson_MS_MEP_FT_R23_v21_HFA-Parker-Chenoweth.rvt
6030-BGH103-CAPTIVEAIRE KITCHEN HOOD DETAIL-ADD 1