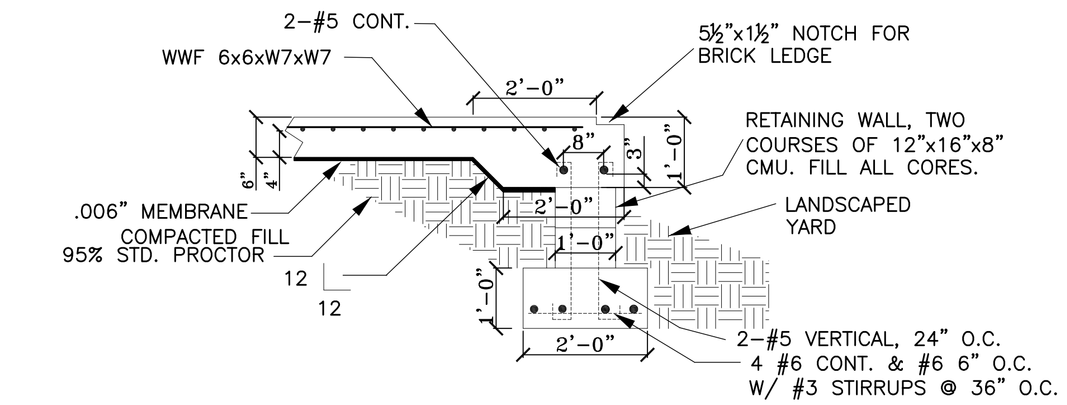

SECTION A
N.T.S.

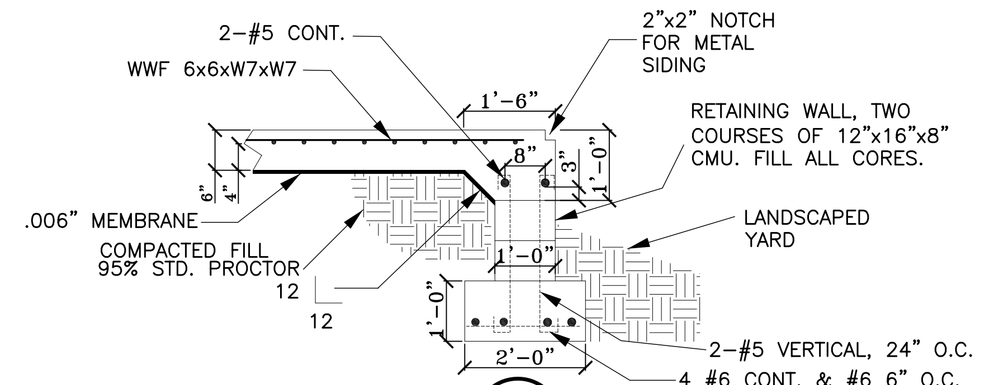

SECTION B
N.T.S.

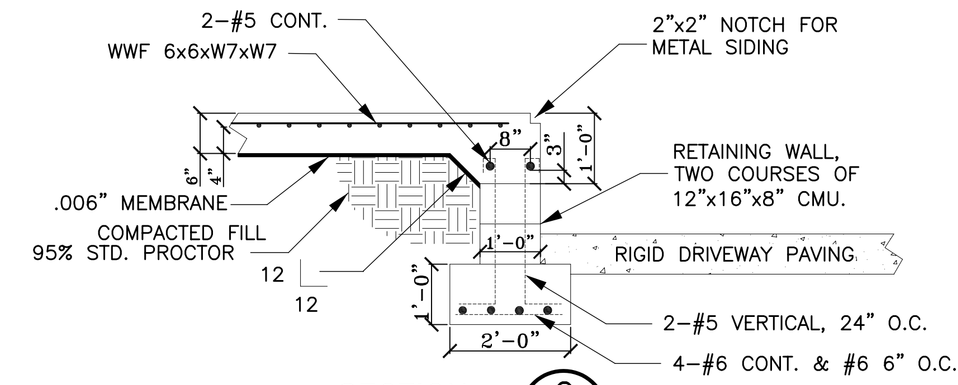

SECTION C
N.T.S.

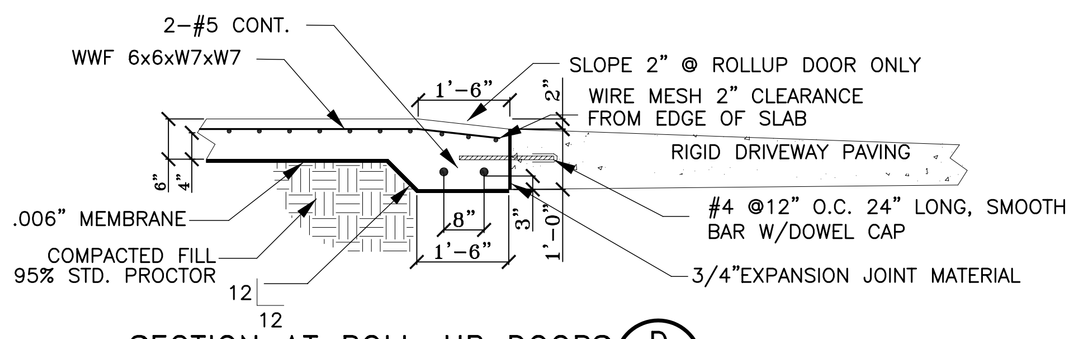

SECTION AT ROLL–UP DOORS D
N.T.S.

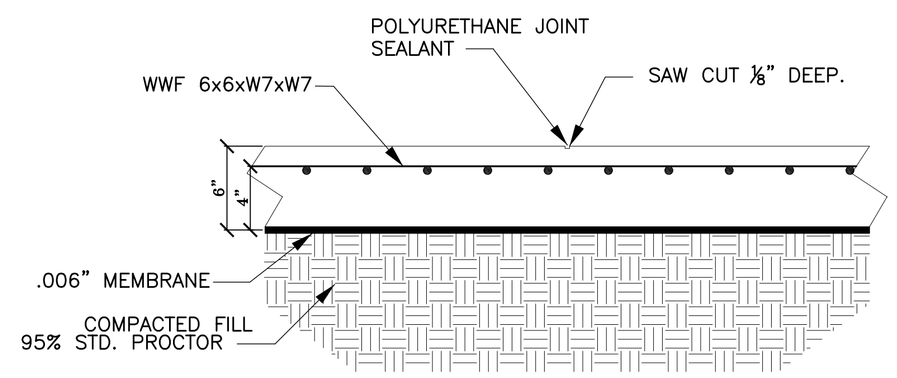

SECTION – CONTROL JOINT E
N.T.S.

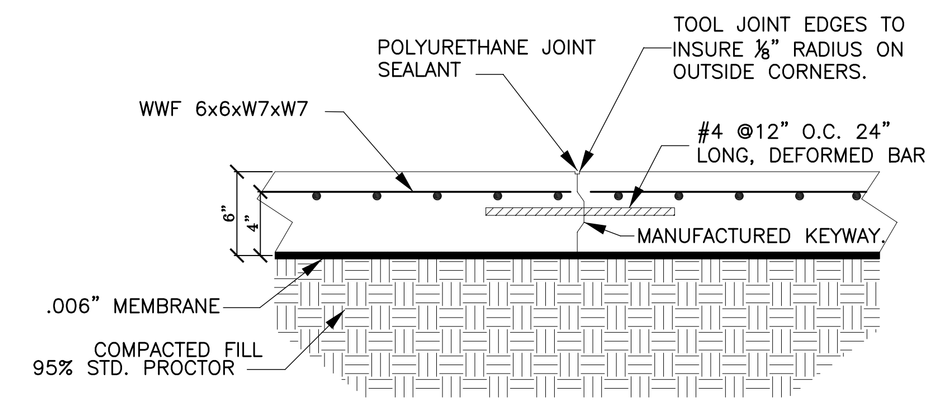

SECTION – CONTROL JOINT F
N.T.S.

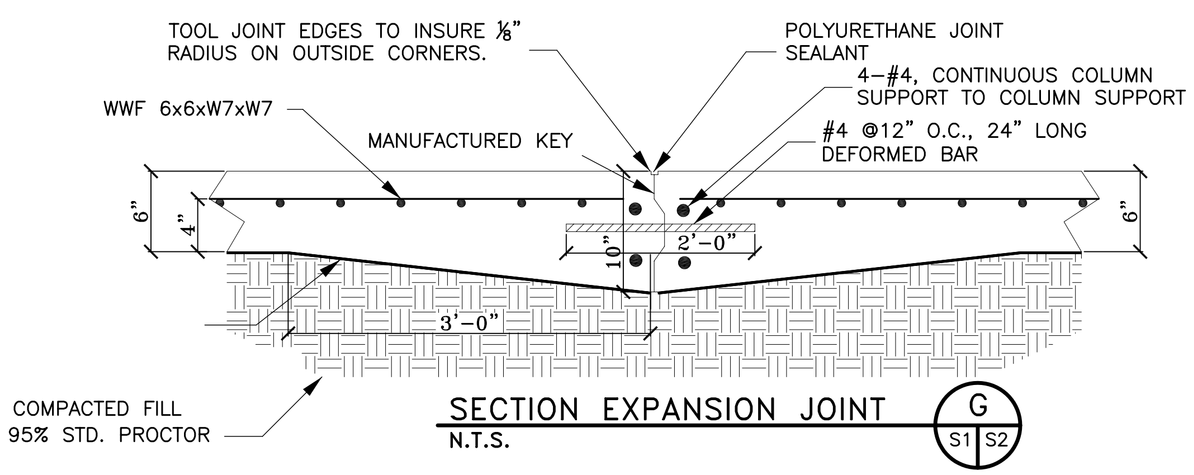

SECTION EXPANSION JOINT G
N.T.S.

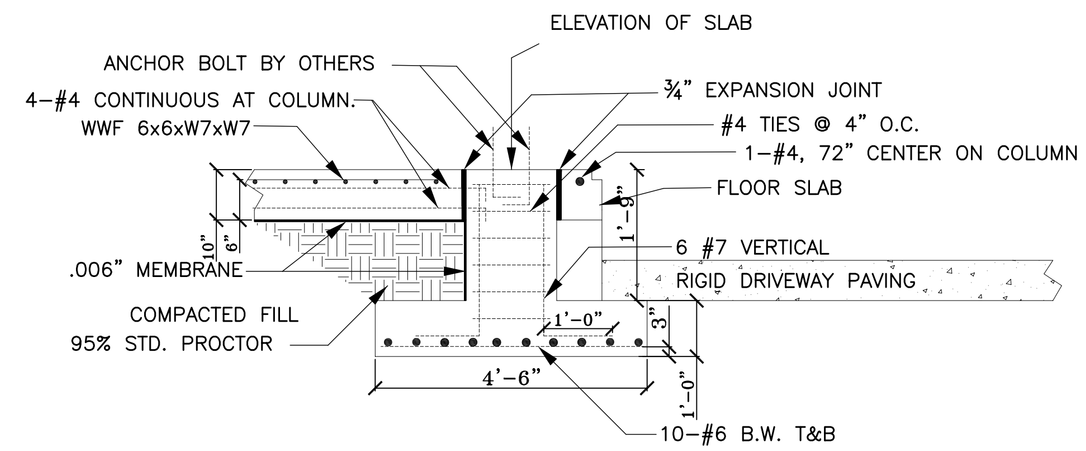

SECTION FRAME LINE 2–5 H
N.T.S.

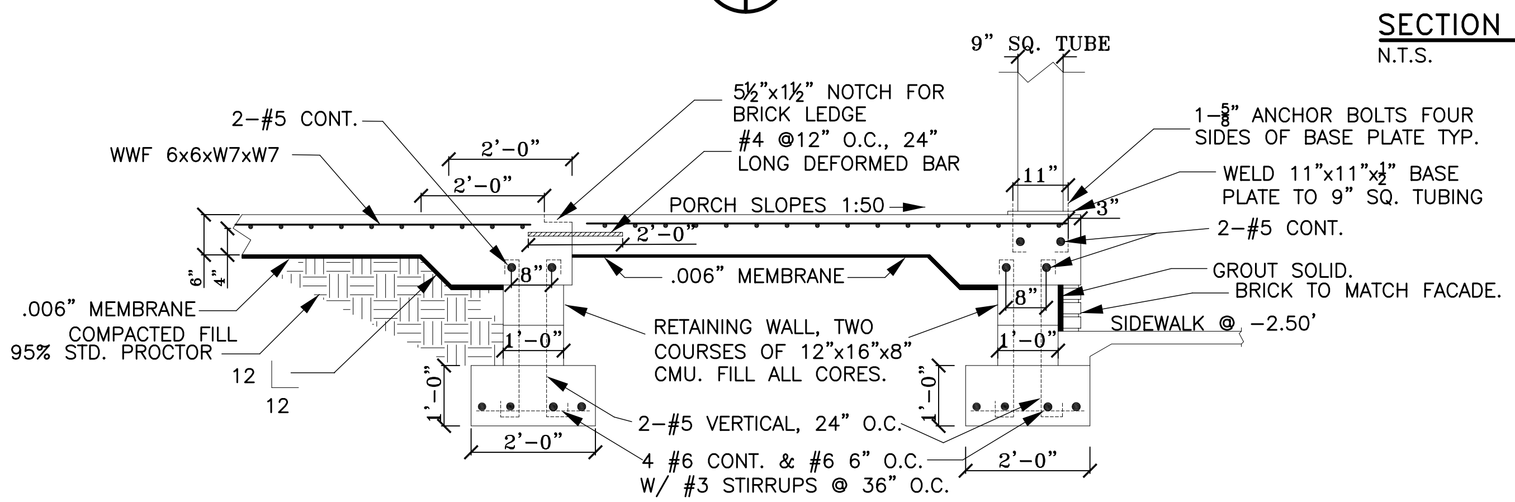

SECTION J
N.T.S.

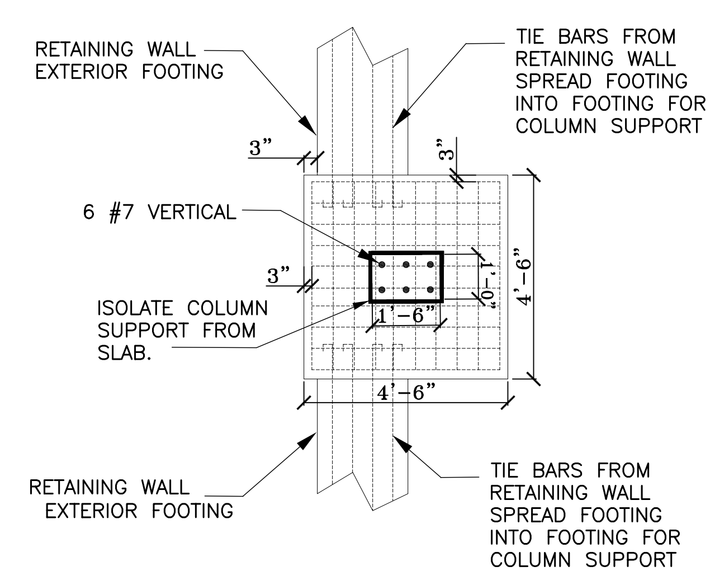

DETAIL SPREAD FOOTING & BEAM 1
N.T.S.

FOUNDATION PLAN

HIGHLAND INDUSTRIAL PARK
LOTS 8 & 9, SEC 24,68,&69
PLAQUEMINES PARISH LA

INSUL–TECH

DAMMON ENGINEERING. INC.
1095 FLORIDA AVENUE 985–649–5832 SLIDELL, LA. 70458
DAMMONENGINEERING.COM

SCALE:AS NOTED
FILE:
JOB NO. 1726
DATE: 11–15–07
SHEET 3
S–2
OF 20