PROJECT: BOB BAKER

DRAINAGE RUN OFF CALCULATIONS – RATIONAL METHOD

PRIOR DEVELOPMENT
25 Year Frequency

Q_1 = CIA

Watertight Surfaces		26176	sqft =	0.601	Acres
c(1) =	0.9				
Gravel Surface		157851	sqft =	3.624	Acres
c(2) =	0.35				
Green Space		70590	sqft =	1.621	Acres
c(3) =	0.35				
Summary		254617	sqft =	5.845	Acres
c =	0.41				

Duration (D) = Time of concentration (TC)
TC = .7031(L^.3917)/(c^-1.1309)(S^-.1985)
where L = 649.33 Runoff length ft; c = 0.41 Runoff coef; S = 0.0770 Percent Slope minutes or
therefore TC = D = 40.98
and from Rainfall Intensity Table I = 4.51 in/hr; Elev diff = 0.5

Q_1 = **10.711 cfs** 15% Reduction **9.104 cfs**

POST DEVELOPMENT
25 Year Frequency

Q_2 = CIA

Watertight Surfaces		46176	sqft =	1.060	Acres
c(1) =	0.9				
Gravel Surface		157851	sqft =	3.624	Acres
c(2) =	0.35				
Green Space		50590	sqft =	1.161	Acres
c(3) =	0.35				
Summary		254617	sqft =	5.845	Acres
c =	0.45				

D = Time of concentration (TC)
TC = .7031(L^.3917)/(c^-1.1309)(S^-.1985)
where L = 200 Runoff length ft; c = 0.45 Runoff coef; S = 1.0000 Percent Slope
therefore TC = D = 13.85
and from Rainfall Intensity Table I = 7.15 in/hr; Elev diff = 2

Q_2 = **18.803 cfs**

RESULTS

DETENTION REQUIRED	$Q_2 - Q_1$	9.699	cfs
ONE HOUR DETENTION		34915.2	cuft
DETENTION DIMENSIONS	WIDTH	45	feet
	LENGTH	200	feet
	DEPTH	**3.88**	**feet**

DISCHARGE END AREA CALCULATIONS

Q = cA(2gH)^1/2 where Q is allowable run off

Allowable run off	Q =	9.104	cfs
Friction loss factor	c =	0.98	coefficient
Acceleration	g =	32.2	ft/sec
Height above invert	if H =	4.00	feet
End area	A =	0.58	sqft

REQUIRED CONDUIT = 10.30 inch diameter

GUTTERS AND DOWN SPOUTS TO BE SEAMLESS ALUMINUM 24 GAUGE, COLOR TO BE SELECTED BY OWNER. GUTTERS TO BE "OGEE" IN CROSS SECTION, MINIMUM 6" WIDTH.

NOTES:
1) DRAIN PIPE & FITTINGS WITHIN PROPERTY LINE SHALL BE POLYVINYL CHLORIDE PLASTIC PIPE, MEETING CLASS 100 C-900 PVC.
2) ELEVATIONS SHOWN ARE M.S.L.
3) FIELD VERIFY ALL ELEVATIONS AND DRAINAGE SYSTEM PLACEMENT PRIOR TO START OF WORK.
3) MUCK OUT 24" DEEP FOR FOUNDATION PAD MINUMINM. OR TO UNDISTURBED SOIL CAPABLE OF 1500 PSF BEARING
4) DOWN SPOUTS SHALL FLOW INTO SUB-SUFRACE DRAINAGE

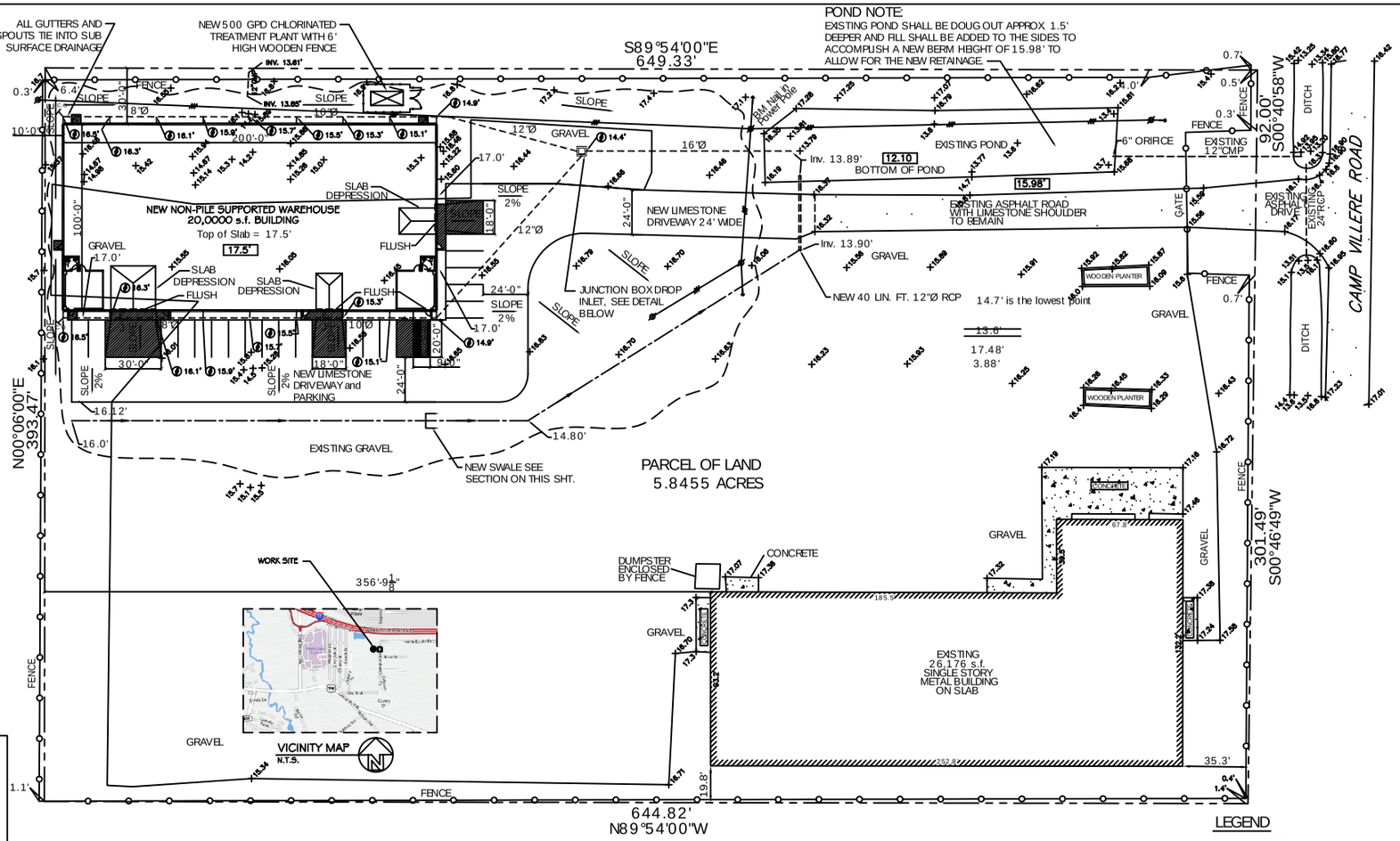

DRAINAGE / PAVING PLAN
SCALE: 1'= 30'-0"

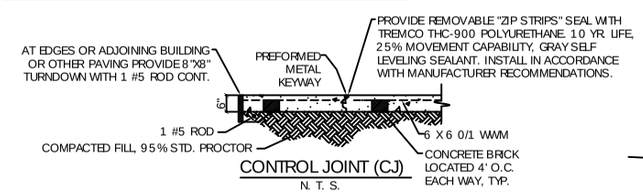

CONTROL JOINT (CJ)
N. T. S.

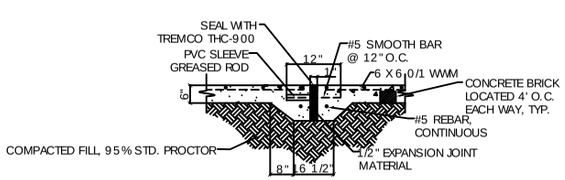

EXPANSION JOINT (EJ)
N. T. S.

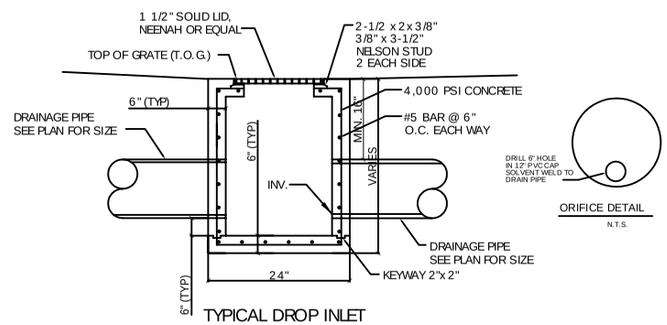

TYPICAL DROP INLET
N.T.S.

ORIFICE DETAIL
N.T.S.

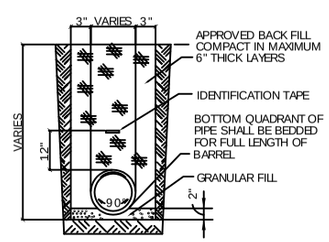

DRAIN PIPE BEDDING
N.T.S.

LEGEND

- SILT FENCING
- PROPERTY LINE
- BUILDING SETBACK
- FENCE
- NEW BUILDING OUTLINE
- HCP - HANDICAP PARKING
- HANDICAP PARKING SIGN
- NEW DROP INLET WTEMP. SILT FENCING
- NEW CONCRETE AREAS
- SLOPE LINES
- T.O. GRATE ELEVATION
- INVERT ELEVATION
- 00.00 - NEW ELEVATIONS
- 00.00 - EXISTING ELEVATIONS

SWALE DETAIL
N.T.S. REVISED 4-29-08

DAMMON ENGINEERING, INC
CHIEF ENGINEER
EMMETT DAMMON, P.E.
CHIEF ARCHITECT
ROBERT WILTSE
1095 FLORIDA AVENUE
SLIDELL, LA. 70458
OFFICE: 985-649-5832
FAX: 985-641-5950
WEBSITE: WWW.DAMMONENGINEERING.COM
EMAIL: DAMMONENG@BELLSOUTH.NET

ARCHITECTURE
ENGINEERING
STUDIES
PLANNING
INVESTIGATION
EXPERT WITNESS

NEW WAREHOUSE

BOB BAKER
CAMP VILLERE
SLIDELL, LA

DRAINAGE AND PAVING PLAN

REV:

SCALE: AS NOTED
JOB#: 1927
DATE: 3-28-08
SHEET 4

C-3

OF 19