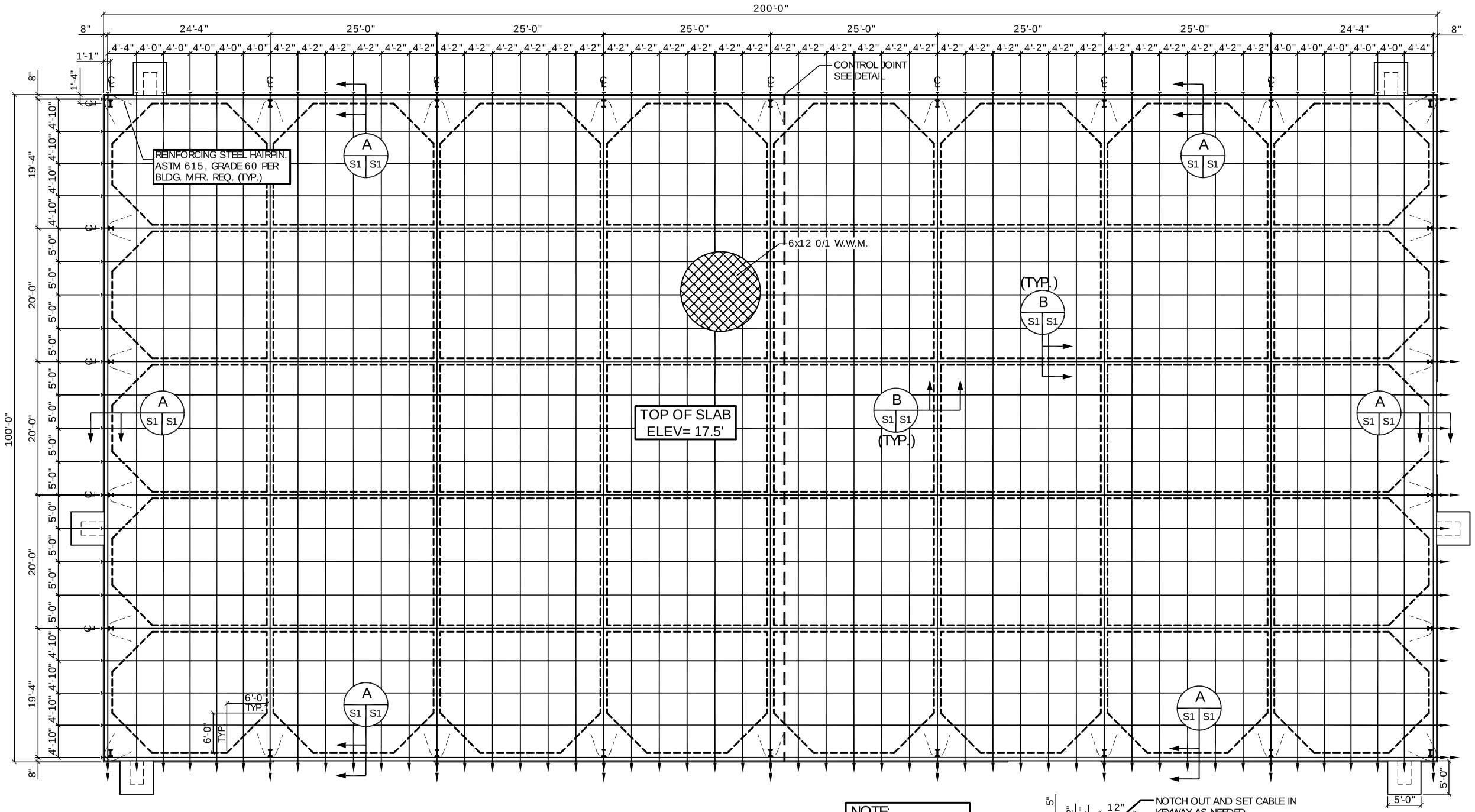

NOTE
FOR FOUNDATION NOTES AND SITE PREPARATION NOTES SEE S-2

FOUNDATION PLAN
SCALE 1/8" = 1'-0"

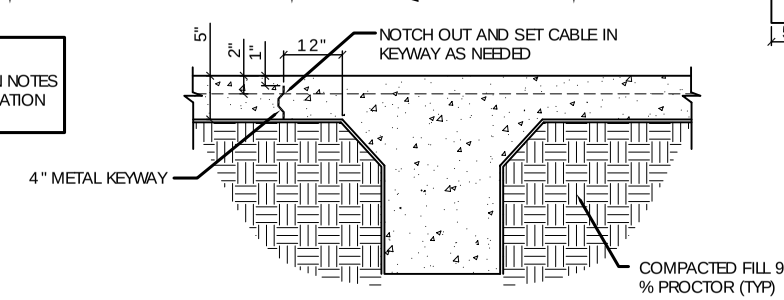

TYP. CONTROL JOINT DETAIL
N.T.S.

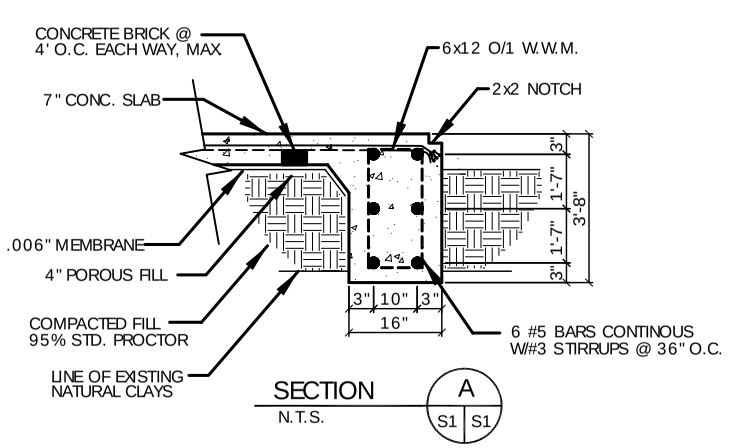

SECTION A
N.T.S.

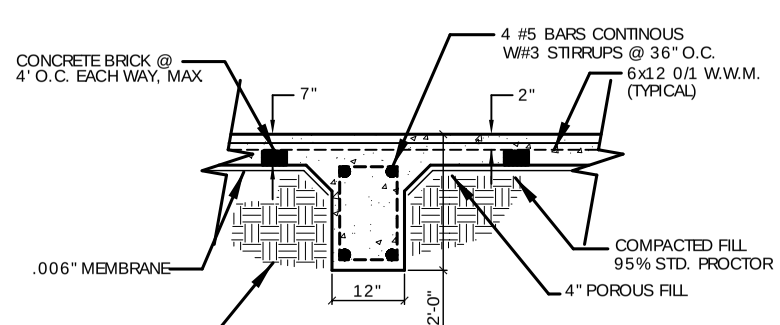

SECTION B
N.T.S.

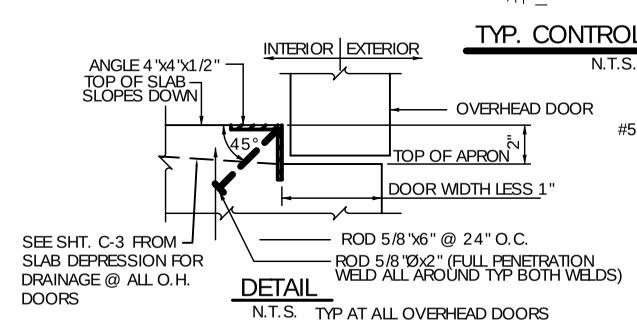

DETAIL
N.T.S. TYP AT ALL OVERHEAD DOORS

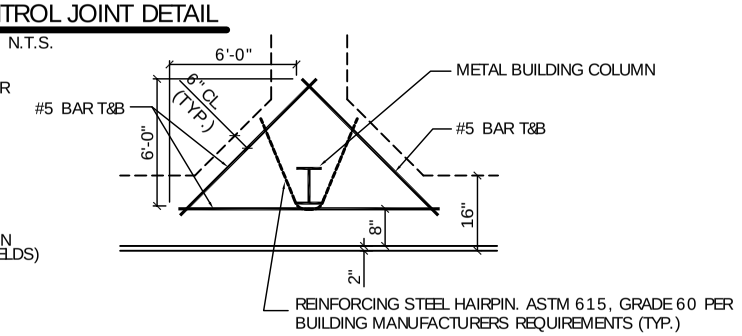

FOOTING @ COLUMN DETAIL
N.T.S.

REVISED 6-24-08

DAMMON
ENGINEERING, INC.

CHIEF ENGINEER
EMMETT
DAMMON, P.E.

CHIEF ARCHITECT
ROBERT
WILTSE

1095 FLORIDA AVENUE
SLIDELL, LA. 70458
OFFICE: 985-649-5832
FAX: 985-641-5950

WEBSITE:
WWW.DAMMONENGINEERING.COM

EMAIL:
DAMMONENG@BELLSOUTH.NET

ARCHITECTURE

ENGINEERING

STUDIES

PLANNING

INVESTIGATION

EXPERT WITNESS

NEW
WAREHOUSE

BOB BAKER
CAMP VILLERE
SLIDELL, LA

FOUNDATION
PLAN

REV:

SCALE: AS NOTED

JOB#: 1927

DATE: 3-28-08

SHEET 7

S-1

OF 19