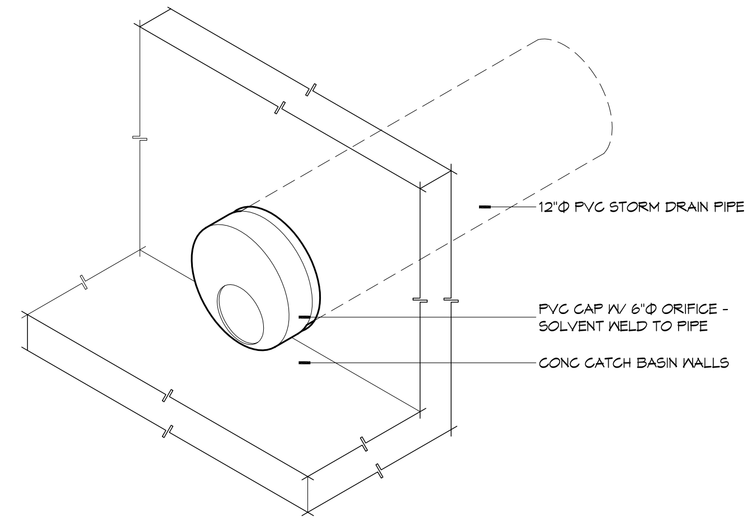

6 ORAFICE DETAIL
SCALE: NTS — END CAP

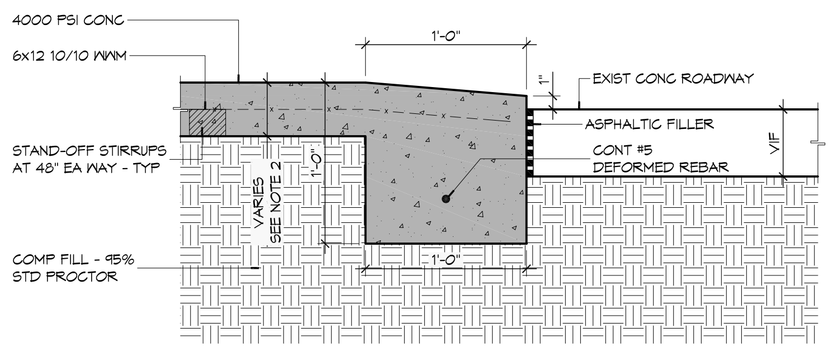

5 TYPICAL PAVING DETAIL
SCALE: 1 1/2" = 1'-0" — DRIVEWAY W/ ROLLOVER CURB

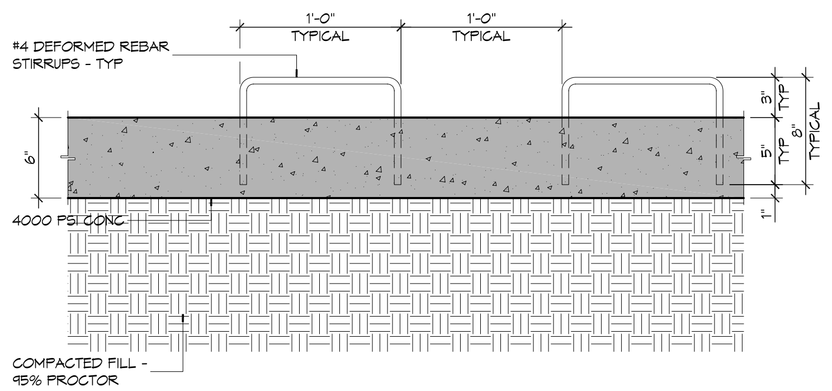

4 TYPICAL PAVING DETAIL
SCALE: 1 1/2" = 1'-0" — CURB DOWELS

6" MTL KEYWAY JOINT SYSTEM NOTE:
LONGITUDINAL JOINTS: No.5 DEFORMED
DOWEL ROD 24" L @ 24" O.C.
TRANSVERSE JOINTS: No.5 SMOOTH
DOWEL ROD 24" L @ 24" O.C.

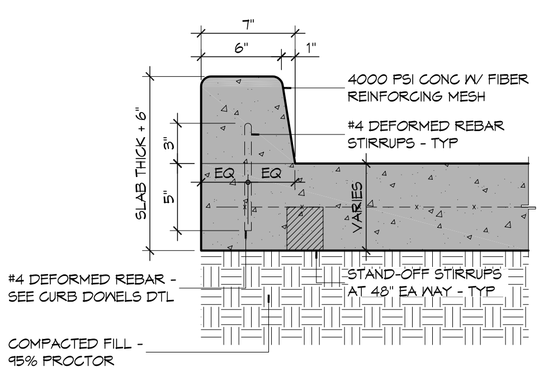

3 TYP PAVING DTL
SCALE: 1 1/2" = 1'-0" — 6" CONCRETE BARRIER CURB

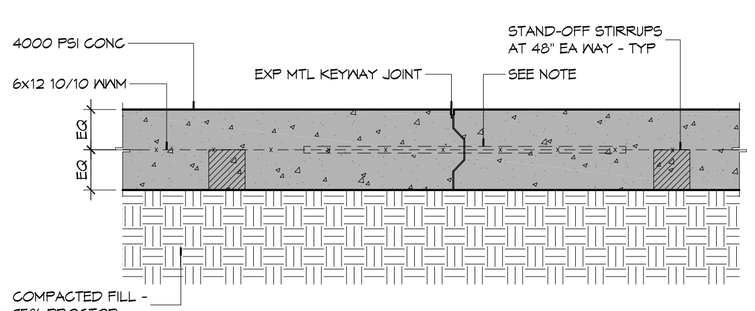

2 TYPICAL PAVING DETAIL
SCALE: 1 1/2" = 1'-0" — KEYWAY JOINT

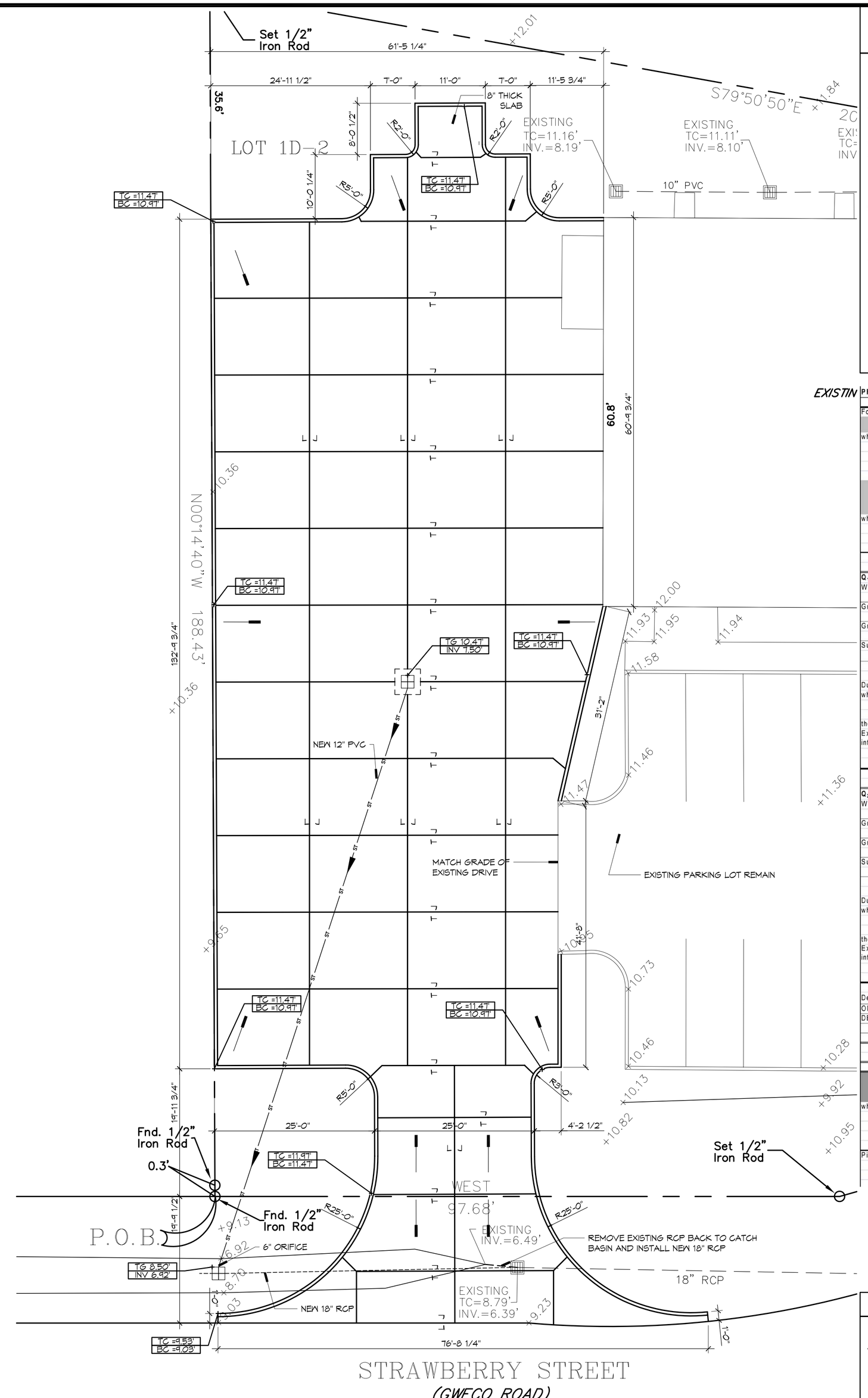

1 PAVING PLAN
SCALE: 1" = 10'

GENERAL PAVING NOTES

1. ALL NEW CONCRETE SHALL SHALL HAVE A MINIMUM COMPRESSIVE STRENGTH OF 4,000 PSI AT 28 DAYS AND A MINIMUM THICKNESS OF 6". CONCRETE MIX SHALL BE IN ACCORDANCE WITH THE LATEST REVISION OF ASTM C-150 TYPE 1.
2. CONCRETE PAVING THICKNESS SHALL VARY AS FOLLOWS:
   a. APRONS & LOADING AREAS = 8" THICKNESS
   b. DRIVE LANES & PARKING AREAS = 6" THICKNESS
3. ALL REINFORCING STEEL SHALL MEET ASTM-A615 (GRADE 60).
4. ALL REINFORCING STEEL SHALL BE SECURELY SUPPORTED TO PREVENT BOTH VERTICAL AND HORIZONTAL MOVEMENT DURING CONCRETE PLACEMENT. ALL CONTROL AND EXPANSION JOINTS SHALL BE LOCATED AND INSTALLED AS SHOWN ON THE PAVING PLAN AND IN ACCORDANCE WITH THE MANUFACTURER'S RECOMMENDATIONS.
5. ALL SUB GRADE FILL SHALL BE SELECT GRANULAR MATERIAL COMPACTED TO 95% STANDARD PROCTOR DENSITY IN A MAXIMUM OF 6" LIFTS.
6. CONTRACTOR SHALL CONTACT THEIR REGULATORY DEPARTMENT OF ENGINEERING PRIOR TO CONDUCTING ANY WORK.
7. ANY WORK WITHIN THE ROADWAY OR ADJACENT TO THE ROADWAY CAUSING AN INTERFERENCE TO VEHICULAR TRAFFIC REQUIRES PRIOR APPROVAL FROM THE CITY TRAFFIC ENGINEERING DIVISION, AND MUST CONFORM TO THE REQUIREMENTS SET FORTH BY THE UNIFORM MANUAL OF TRAFFIC CONTROL DEVICES OF THE STATE OF LOUISIANA. THE CONTRACTOR MUST FURNISH ALL NECESSARY TRAFFIC SIGNS AND/OR BARRICADES AND MAINTAIN THEM DURING CONSTRUCTION ACTIVITY.

EXISTIN

PROJECT: KBR

STORMWATER RUN-OFF CALCULATIONS

Formulas used:

[1] RATIONAL METHOD: Q=Aci

where:
- Q= Peak discharge of watershed in cubic feet per second (cfs) due to maximum stor assumed.
- A= Area of watershed in acres.
- c= Coefficient of run-off [2].
- i= Intensity of rainfall in inches per hour based on concentration time. [3]

[4] $TC = \dfrac{\left(L^{0.8}\left(\frac{1000}{s}-9\right)^{0.7}\right)}{\left(1140(s^{0.5})\right)}$

where:
- TC= Time of concentration= time required for rain falling at most remote point to reach discharge point.
- c= Site run-off coefficient based on conditions shown.
- s= Percent slope of overland flow.

PRIOR DEVELOPMENT
25 Year Frequency

Q_1 = Aci

Watertight Surfaces		8974	sqft =	0.206	Acres
c(1) =	0.9				
Gravel Surface		0	sqft =	0.000	Acres
c(2) =	0.25				
Green Space		21258	sqft =	0.488	Acres
c(3) =	0.15				
Summary		30232	sqft =	0.694	Acres
c =	0.37				

Duration (D) = Time of concentration (TC)

where	L =	196	run-off length ft	Elev diff = 1
	c =	0.37	run-off coef	
	S =	0.5102	percent slope	
therefore	TC = D =	10.71	minutes	
Expected rainfall intensity	i =	3.64	in/hr	

Q_1 = 0.941 cfs — 10% reduction 0.094 cfs

POST DEVELOPMENT
25 Year Frequency

Q_2 = Aci

Watertight Surfaces		26445	sqft =	0.607	Acres
c(1) =	0.9				
Gravel Surface		0	sqft =	0.000	Acres
c(2) =	0.25				
Green Space		3787	sqft =	0.087	Acres
c(3) =	0.15				
Summary		30232	sqft =	0.694	Acres
c =	0.81				

Duration (D) = Time of concentration (TC)

where	L =	132	run-off length ft	Elev diff = 1.5
	c =	0.81	run-off coef	
	S =	1.1364	percent slope	
therefore	TC = D =	6.77	minutes	
Expected rainfall intensity	i =	3.64	in/hr	

Q_2 = 2.036 cfs

DETENTION REQUIREMENTS

Detention required Q_2-Q_1	1.09	cfs		
ONE HOUR DETENTION	3941.8	cuft		
DETENTION DIMENSIONS		WIDTH	53	feet
		LENGTH	132	feet
		DEPTH	0.56	feet

DISCHARGE END AREA REQUIREMENTS
10 Year Frequency

[5] $A = \dfrac{Q}{\left(c\sqrt{(2gh)}\right)}$

where:
- A= Discharge Area required
- g= Acceleration of gravity
- c= Discharge coefficient
- h= Hydraulic head
- Q= Flow volume from run-off

Pipe Servicing Site Drainage

Q =	0.094	cfs	h =	2.50	feet
c =	0.62	coefficient	A =	0.012	sqft
g =	32.16	ft/sec/sec			

SITE LEGEND

LEGEND

- PROPERTY LINE
- TG =11.4' / BG =10.9' — TOP OF CURB / BOTTOM OF CURB
- TG 00.0' / INV 00.0' — TOP OF GRATE / INVERT OF PIPE
- x00.00 EXISTING ELEVATIONS
- DRAINAGE FLOW ARROWS

DAMMON ENGINEERING, INC.
Architects & Engineers
www.dammonengineering.com
info@dammonengineering.com
P: 985.641.5332
F: 985.641.5950
Chief Architect: Kevin J. Kinchen, NCARB
Chief Engineer: Brian Mistich, PE
5500 Canal Blvd
Suite 1
Slidell, LA 70458

#	DESCRIPTION	DATE
	REVISIONS	

SEAL:

OFFICE BUILDOUT FOR
KBR ENTERPRISES
116 STRAWBERRY STREET
SLIDELL, LOUISIANA 70460

JOB No:	2221
DATE:	01-07-15
DRAWN BY:	CKD/KJK
CHECKED BY:	CKD

The drawings and specifications contained herein are the property of Dammon Engineering, and shall not be reproduced or used for any purpose other than that for which they have been prepared and developed without written consent of Dammon Engineering. Visual contact with these drawings and specifications shall constitute prima facie evidence of the acceptance of these restrictions.

SHEET TITLE:
SITE PAVING PLAN & DETAILS

DRAWING NUMBER:
C102

SHEET No: 5 of 11

FILE NAME: J:_Office Buildouts\KBR ENTERPRISES BILDOUT\Drawings\Current Drawings\C102.dwg PLOT DATE & TIME: Wednesday, January 21, 2015 9:39:19 AM