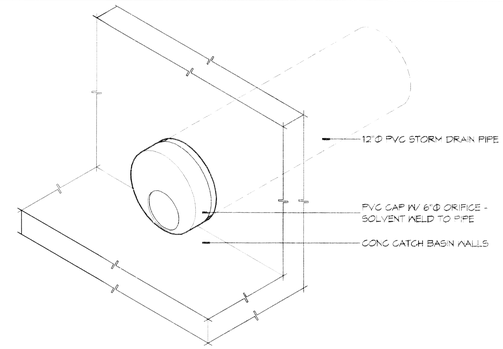

6 ORAFICE DETAIL
SCALE: NTS — END CAP

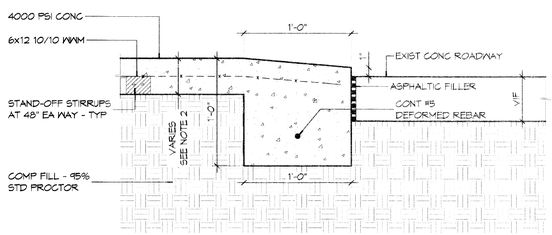

5 TYPICAL PAVING DETAIL
SCALE: 1 1/2" = 1'-0" — DRIVEWAY W/ ROLLOVER CURB

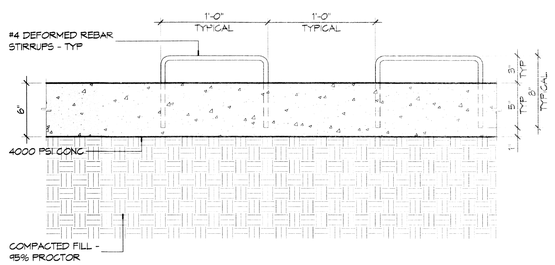

4 TYPICAL PAVING DETAIL
SCALE: 1 1/2" = 1'-0" — CURB DOWELS

6" MTL KEYWAY JOINT SYSTEM NOTE:
LONGITUDINAL JOINTS: No.5 DEFORMED DOWEL ROD 24" L @ 24" O.C.
TRANSVERSE JOINTS: No.5 SMOOTH DOWEL ROD 24" L @ 24" O.C.

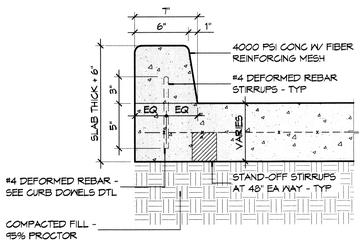

3 TYP PAVING DTL
SCALE: 1 1/2" = 1'-0" — 6" CONCRETE BARRIER CURB

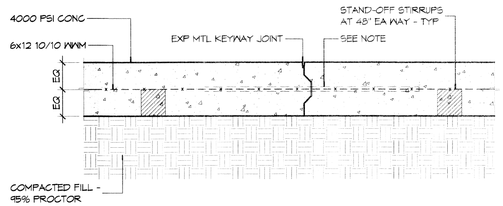

2 TYPICAL PAVING DETAIL
SCALE: 1 1/2" = 1'-0" — KEYWAY JOINT

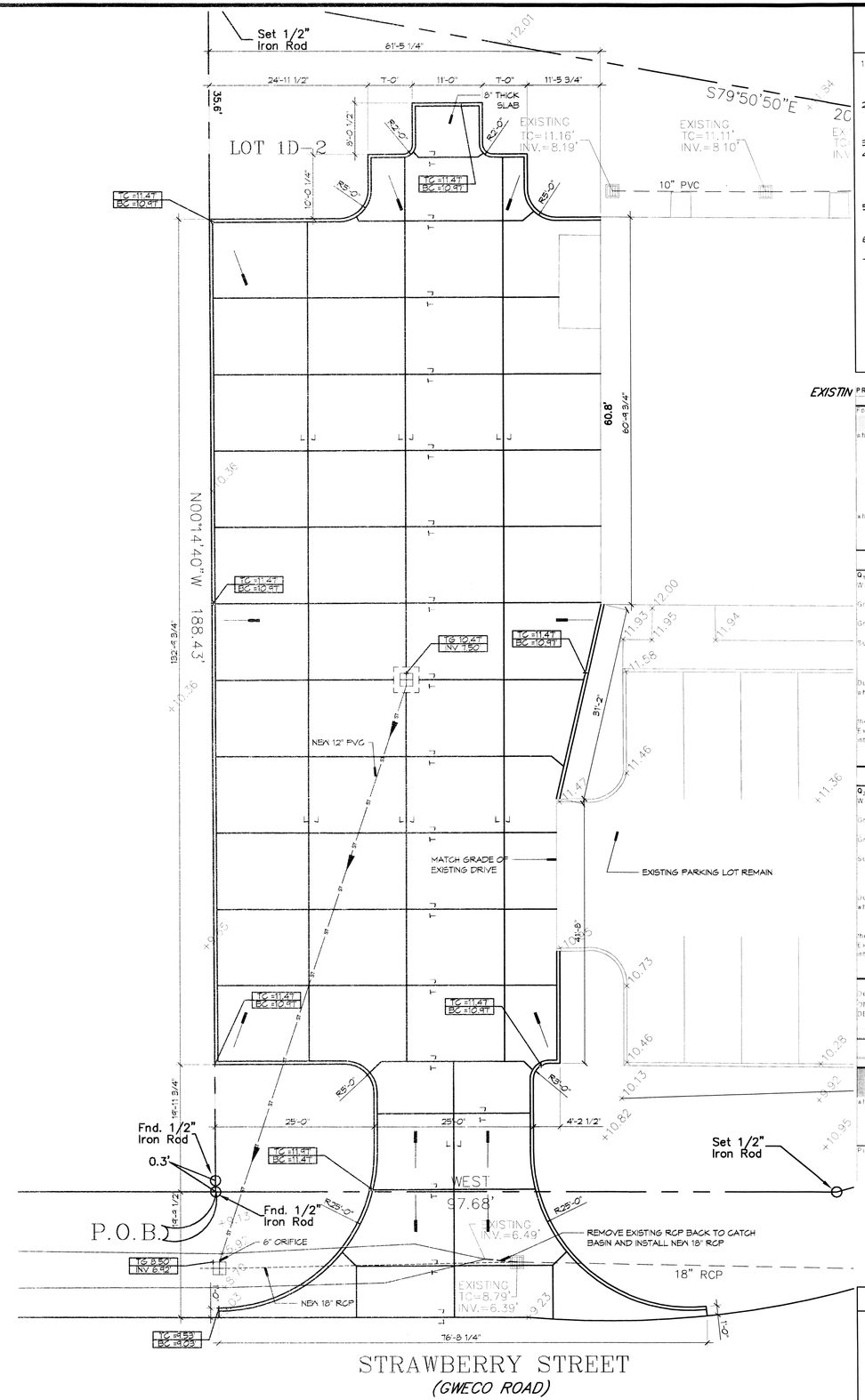

1 PAVING PLAN
SCALE: 1" = 10'

GENERAL PAVING NOTES

1. ALL NEW CONCRETE SHALL SHALL HAVE A MINIMUM COMPRESSIVE STRENGTH OF 4,000 PSI AT 28 DAYS AND A MINIMUM THICKNESS OF 6". CONCRETE MIX SHALL BE IN ACCORDANCE WITH THE LATEST REVISION OF ASTM C-150 TYPE 1.
2. CONCRETE PAVING THICKNESS SHALL VARY AS FOLLOWS:
   a. APRONS & LOADING AREAS = 8" THICKNESS
   b. DRIVE LANES & PARKING AREAS = 6" THICKNESS
3. ALL REINFORCING STEEL SHALL MEET ASTM-A615 (GRADE 60).
4. ALL REINFORCING STEEL SHALL BE SECURELY SUPPORTED TO PREVENT BOTH VERTICAL AND HORIZONTAL MOVEMENT DURING CONCRETE PLACEMENT. ALL CONTROL AND EXPANSION JOINTS SHALL BE LOCATED AND INSTALLED AS SHOWN ON THE PAVING PLAN AND IN ACCORDANCE WITH THE MANUFACTURER'S RECOMMENDATIONS
5. ALL SUB GRADE FILL SHALL BE SELECT GRANULAR MATERIAL COMPACTED TO 95% STANDARD PROCTOR DENSITY IN A MAXIMUM OF 6" LIFTS.
6. CONTRACTOR SHALL CONTACT THEIR REGULATORY DEPARTMENT OF ENGINEERING PRIOR TO CONDUCTING ANY WORK.
7. ANY WORK WITHIN THE ROADWAY OR ADJACENT TO THE ROADWAY CAUSING AN INTERFERENCE TO VEHICULAR TRAFFIC REQUIRES PRIOR APPROVAL FROM THE CITY TRAFFIC ENGINEERING DIVISION, AND MUST CONFORM TO THE REQUIREMENTS SET FORTH BY THE UNIFORM MANUAL OF TRAFFIC CONTROL DEVICES OF THE STATE OF LOUISIANA. THE CONTRACTOR MUST FURNISH ALL NECESSARY TRAFFIC SIGNS AND/OR BARRICADES AND MAINTAIN THEM DURING CONSTRUCTION ACTIVITY.

EXISTIN

PROJECT: KBR
STORM WATER RUN OFF CALCULATIONS

Formulas used:

[1] RATIONAL METHOD: Q=Aci

where: Q= Peak discharge of watershed in cubic feet per second (cfs) due to maximum storm assumed
A= Area of a watershed in acres
c= Coefficient of runoff [0]
i= Intensity of rainfall in inches per hour based on concentration time [3]

[4] $TC = \left(\frac{L^{0.8}\left(\frac{1000}{S}-9\right)^{0.7}}{4{,}1140 S^{0.5}}\right)$

where: TC= Time of concentration (time required for rain falling at most remote point to reach discharge point)
L= Site runoff coefficient based on conditions shown
S= Percent slope of watershed area

PRIOR DEVELOPMENT
25-Year Frequency

$Q_p = Ac$

Watertight Surfaces		8974	sqft =	0.206 Acres
c=0.9	0.9			
Gravel Surface		0	sqft =	0.000 Acres
c=0.25	0.25			
Green Space		21258	sqft =	0.488 Acres
c=0.15	0.15			
Summary		30232	sqft =	0.694 Acres
c=	0.37			

Duration (Day) Time of concentration TC:
where: L = 190 runoff length ft; S = 0.97 runoff slope; S = 0.5502 percent slope; Elev diff = 1
therefore: TC = 10.71 minutes
Expected rainfall intensity: i = 3.64 in/hr
$Q_p =$ ____ cfs

POST DEVELOPMENT
25-Year Frequency

$Q_p = Ac$

Watertight Surfaces		26445	sqft =	0.607 Acres
c=0.9	0.9			
Gravel Surface		0	sqft =	0.000 Acres
c=0.25	0.25			
Green Space		3787	sqft =	0.087 Acres
c=0.15	0.15			
Summary		30232	sqft =	0.694 Acres
c=	0.81			

Duration (Day) Time of concentration TC:
where: L = 132 runoff length ft; S = 0.97 runoff slope; S = 1.1364 percent slope; Elev diff = 1.5
therefore: TC = 9.77 minutes
Expected rainfall intensity: i = 3.64 in/hr
$Q_p =$ ____ cfs

DETENTION REQUIREMENTS

Detention required: $Q_p Q_r$ = 7.09 cfs
SITE HOURS = 19.5 hours; V_r = 9411.5 cuft
DETENTION DIMENSIONS: WIDTH 53 feet; LENGTH 132 feet; DEPTH ____ feet

DISCHARGE END AREA REQUIREMENTS
10-Year Frequency

[5] A= $\frac{Q}{C_d\sqrt{2gH}}$

where:
Q = Discharge Area required
g = Acceleration of gravity
C_d = Discharge coefficient
H = Hydraulic head
Q = Total volume from run-off

Pipe Specifying Site Drainage
Q = 0.091 cfs; H = 2.50 feet
C_d = 0.62 coefficient; A = 0.012 sqft
g = 32.16 ft/sec/sec

462699
REVIEWED FOR STATE FIRE MARSHAL AS PER REVIEW LETTER BY WILLIAM D. JONES, ARCHITECT, CFPS

SITE LEGEND

LEGEND

- PROPERTY LINE
- TG =11.4' / BG =10.9' — TOP OF CURB / BOTTOM OF CURB
- TG 00.0 / INV 00.0 — TOP OF GRATE / INVERT OF PIPE
- ×00.00 — EXISTING ELEVATIONS
- DRAINAGE FLOW ARROWS

DAMMON ENGINEERING, INC.
architects & engineers
www.dammonengineering.com
info@dammonengineering.com
PH: 985.649.5832
FX: 985.641.5950
Chief Architect: Kevin J. Kitchen, NCARB
Chief Engineer: Brian Masten, PE
554 Old Spanish Trail
Slidell, LA 70458

#	DESCRIPTION	REVISIONS	DATE

SEAL:

OFFICE BUILDOUT FOR
V B V ENTERPRISES
176 STRAWBERRY STREET
SLIDELL, LOUISIANA 70460

DATE: 01-07-15
JOB No: 2221
DRAWN BY: GC/KJK
CHECKED BY: CKD

This plan is the exclusive property of Dammon Engineering, and can not be used or reproduced without written consent. Dammon Engineering, and its consultants, shall not be liable for any changes made to this plan by others without written consent of Dammon Engineering. Reuse of this plan for other projects, or extensions of this project not contemplated by the original scope of work, without written consent of Dammon Engineering, is prohibited and is at the reuser's sole risk and without liability to Dammon Engineering. Reuse without written consent shall be deemed to be a violation of this notice.

SHEET TITLE:
SITE PAVING PLAN & DETAILS

DRAWING NUMBER:
C102

SHEET No: 5 of 11