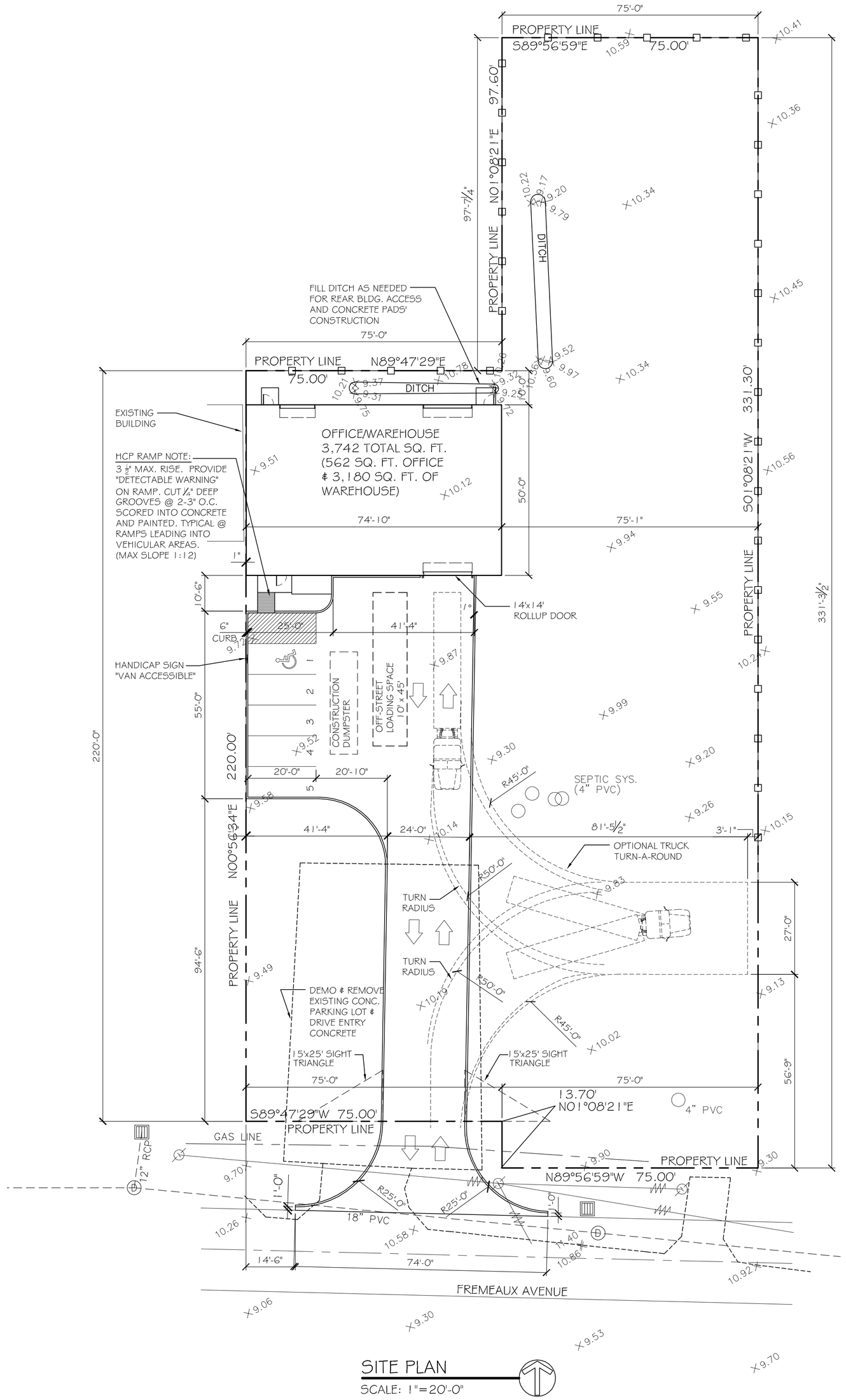


SITE PLAN
SCALE: 1"=20'-0"

## LEGEND

- PROPERTY LINE
- SETBACK LINE
- NEW BUILDING
- PARKING
- 6' OPAQUE FENCE
- HCP - HANDICAP PARKING
- HANDICAP PARKING SIGN

## GENERAL NOTES:

1) NO EXTERIOR LIGHTING PROVIDED ON THIS BUILDING.

2) EXTERIOR OF BUILDING SHALL BE STUCCO, CINDER BLOCK, R-PANEL, ARCHITECTURAL AND CORRUGATED PANELS.

3) THIS AN EXISTING SITE AND NO TRAFFIC STUDY IS REQUIRED AS A NO INCREASE IN TRAFFIC WILL OCCUR. DOTD ONLY REQUIRES A STUDY ON STATE ROADS.

4) NO SIDEWALK REQUIRED AS NO OTHER BUSINESS HAVE ONE ON THIS STREET.

5) TRASH CANS SHALL BE STORED IN WAREHOUSE.

## OFFICE WAREHOUSE PARKING REQUIREMENTS

OFFICE - 1 PER TWO HUNDRED SQUARE FT. = 3
WAREHOUSE - 1 PER 5 EMPLOYEES = 1
TOTAL PARKING REQUIRED = 4 SPACES INCLUDING
1 HANDICAP ACCESSIBLE. TOTAL PROVIDED = 5

NOTE:
ALL CONCRETE PAVEMENT SHALL BE 5" THICK CONCRETE EXCEPT FROM PROPERTY LINE TO STREET SHALL BE 6" THICK CONCRETE.

## SITE PLAN NOTES

1. ROOFING MATERIAL: METAL ROOFING PANEL
2. SIDING MATERIAL: METAL PANELS & CMU
3. UTILITIES: ALL UTILITIES SHALL BE PLACED UNDERGROUND

NOTE:
SIGNAGE SHALL COMPLY WITH SIGNAGE GUIDELINES

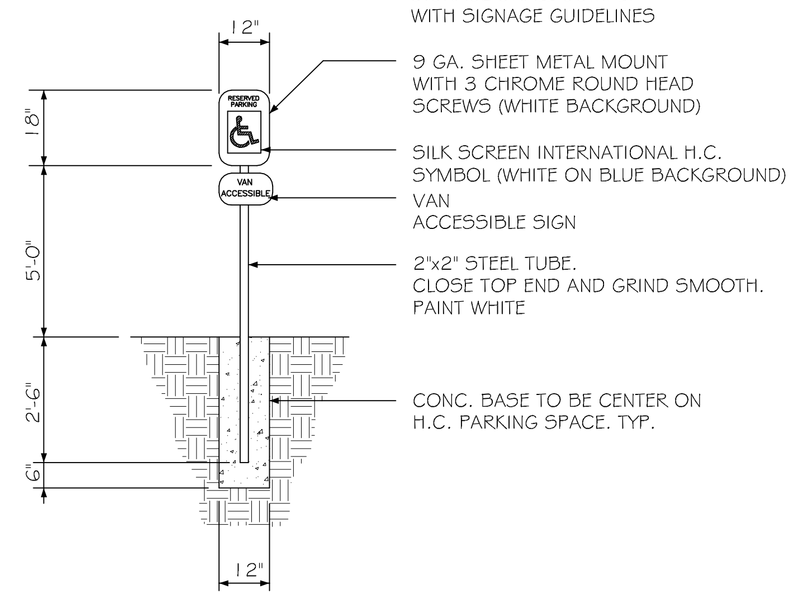


HANDICAP PARKING SIGN
N. T. S.

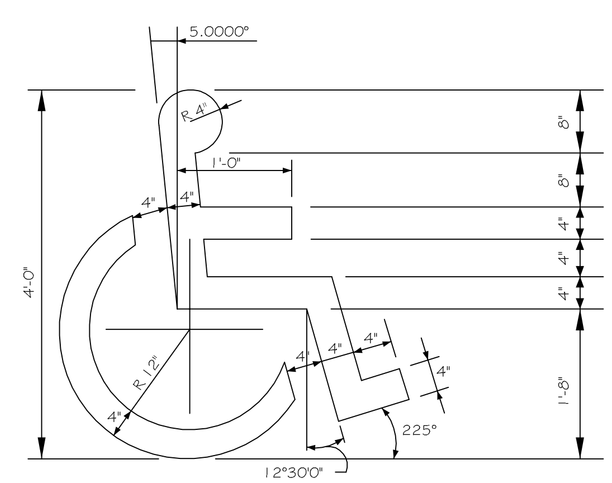


HANDICAP SYMBOL DETAIL
N. T. S.

## SITE LIGHTING

EXTERIOR LIGHTING SHALL BE SHADED OR INWARDLY DIRECTED IN SUCH A MANNER SO THAT NO DIRECT LIGHTING OR GLARE BE CAST BEYOND THE PROPERTY LINE. THE INTENSITY OF SUCH LIGHTING SHALL NOT EXCEED ONE FOOT CANDLE AS MEASURED AT THE ABUTTING PROPERTY LINE. (N/A FOR THIS PARTICULAR JOB)


DAMMON ENGINEERING, INC.
Architects & Engineers
CHIEF ENGINEER: EMMETT DAMMON, P.E.
CHIEF ARCHITECT: KEVIN ARGHEN
5544 ADMIRAL TEXTRAIL
SLIDELL, LA 70458
dammonengineering.com
dammon@bellsouth.net
PHONE: 985-649-5832
FAX: 985-641-5950


BULK SYSTEM'S NEW OFFICE/WAREHOUSE BUILDING
1226 FREMEAUX AVENUE
SLIDELL, LOUISIANA 70458


The above drawings and specifications, designs and arrangements represented thereby are and shall remain the exclusive property of Dammon Engineering, Inc. and no part of or information contained in, disclosed or discussed therein may be used by any person, firm or corporation for any purpose whatsoever without the express written permission of Dammon Engineering, Inc. Visual contact with these drawings or specifications shall constitute conclusive evidence of acceptance of these restrictions.


| JOB No: | DATE: 04-22-2013 |
|---|---|
| DRAWN BY: JTL | CHECKED BY: |

REVISIONS

| # | DESCRIPTION | DATE |
|---|---|---|
| | | |

SITE PLAN

SHEET No: C2 OF