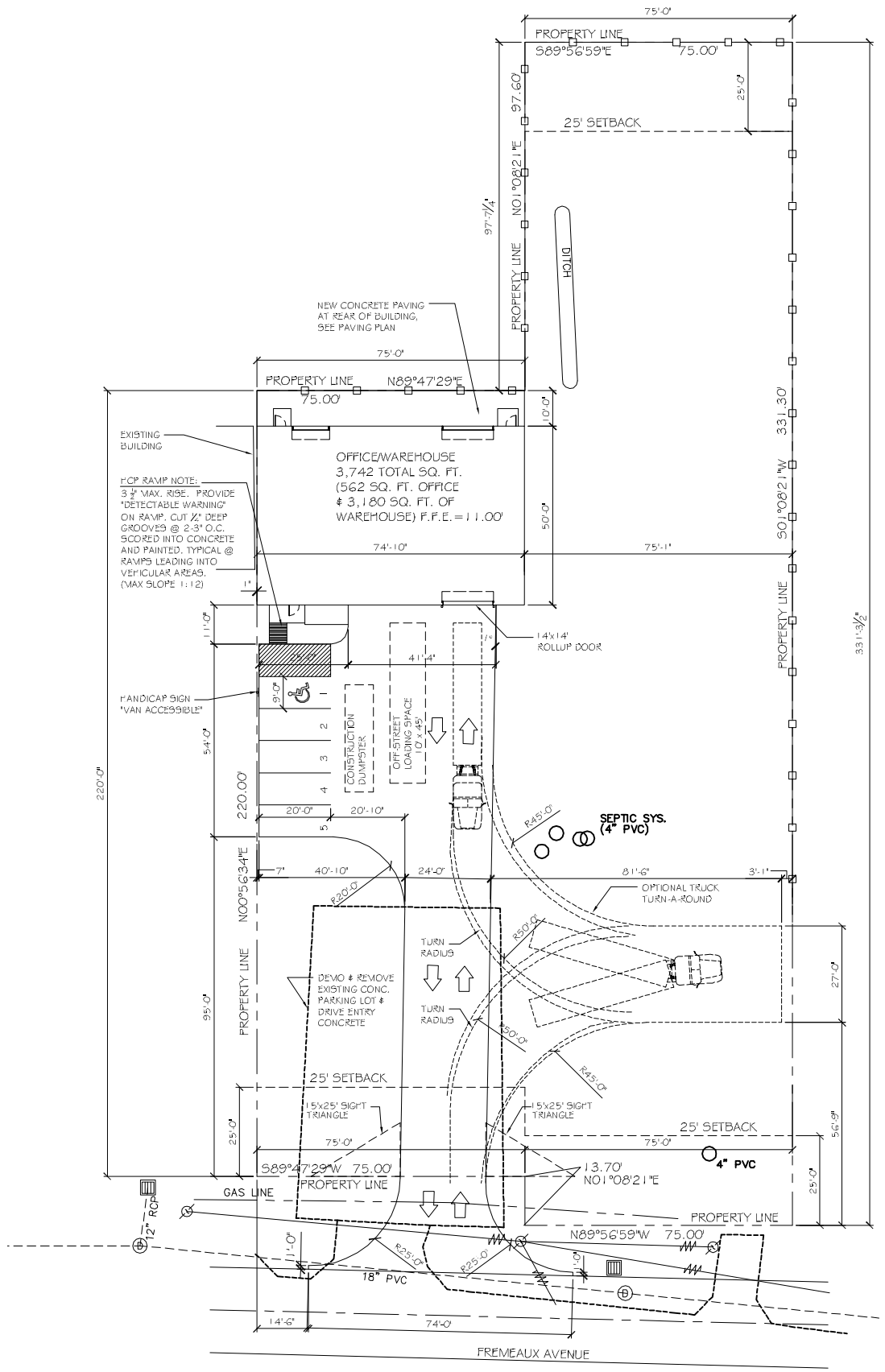

SITE PLAN

SCALE: 1"=20'-0"

LEGEND

- PROPERTY LINE
- SETBACK LINE
- NEW BUILDING
- PARKING
- 6' OPAQUE FENCE
- HCP - HANDICAP PARKING
- HANDICAP PARKING SIGN

OFFICE WAREHOUSE PARKING REQUIREMENTS

OFFICE - 1 PER TWO HUNDRED SQUARE FT. = 3
WAREHOUSE - 1 PER 5 EMPLOYEES = 1
TOTAL PARKING REQUIRED = 4 SPACES INCLUDING
1 HANDICAP ACCESSIBLE. TOTAL PROVIDED = 5

NOTE:
ALL CONCRETE PAVEMENT SHALL BE 5" THICK CONCRETE EXCEPT FROM PROPERTY LINE TO STREET SHALL BE 6" THICK CONCRETE.

SITE PLAN NOTES

1. ROOFING MATERIAL : METAL ROOFING PANEL
2. SIDING MATERIAL : METAL PANELS & CMU
3. UTILITIES : ALL UTILITIES SHALL BE PLACED UNDERGROUND

NOTE:
SIGNAGE SHALL COMPLY WITH SIGNAGE GUIDELINES

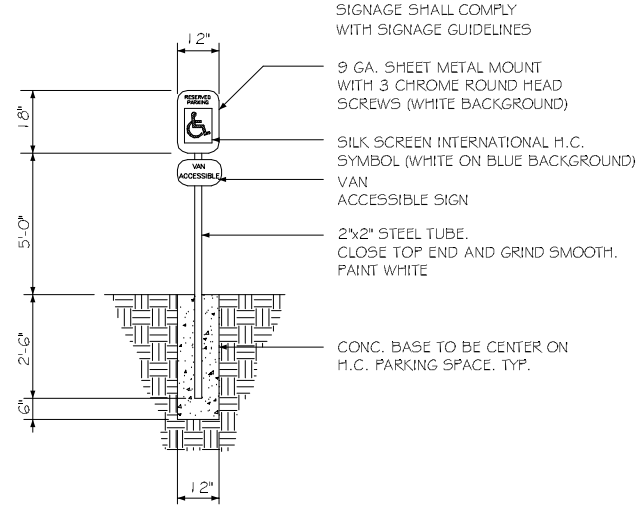

HANDICAP PARKING SIGN

N. T. S.

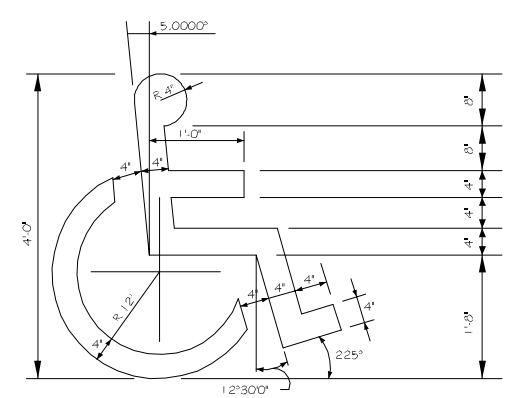

HANDICAP SYMBOL DETAIL

N. T. S.

SITE LIGHTING

EXTERIOR LIGHTING SHALL BE SHADED OR INWARDLY DIRECTED IN SUCH A MANNER SO THAT NO DIRECT LIGHTING OR GLARE BE CAST BEYOND THE PROPERTY LINE. THE INTENSITY OF SUCH LIGHTING SHALL NOT EXCEED ONE FOOT CANDLE AS MEASURED AT THE ABUTTING PROPERTY LINE. (N/A FOR THIS PARTICULAR JOB)

DAMMON ENGINEERING, INC.
Architects & Engineers

CHIEF ENGINEER: EMMETT DAMMON, P.E.
CHIEF ARCHITECT: CYNTHIA KINCHEN
554 OLD SPANISH TRAIL
SLIDELL, LA 70450

dammoneng@bellsouth.net
dammonarch@bellsouth.net
PHONE: 985-649-5932
FAX: 985-641-5950

Dammon Engineering & Architecture Inc. Reserves the ownership of all drawings, specifications, designs and other instruments of service. All rights including copyright are reserved by Dammon Engineering & Architecture Inc. These documents are not to be used for any purpose other than the construction of the project for which they are specifically prepared and shall not be used for any other purpose without the express written consent of Dammon Engineering & Architecture Inc.

BULK SYSTEMS NEW OFFICE/WAREHOUSE BUILDING

122-G FREMEAUX AVENUE
SLIDELL, LOUISIANA 70458

JOB No:	2173	DATE: 04-22-2013
DRAWN BY:	JTL	CHECKED BY:

REVISIONS

#	DESCRIPTION	DATE

SITE PLAN

SHEET No: 3 OF 20

C2