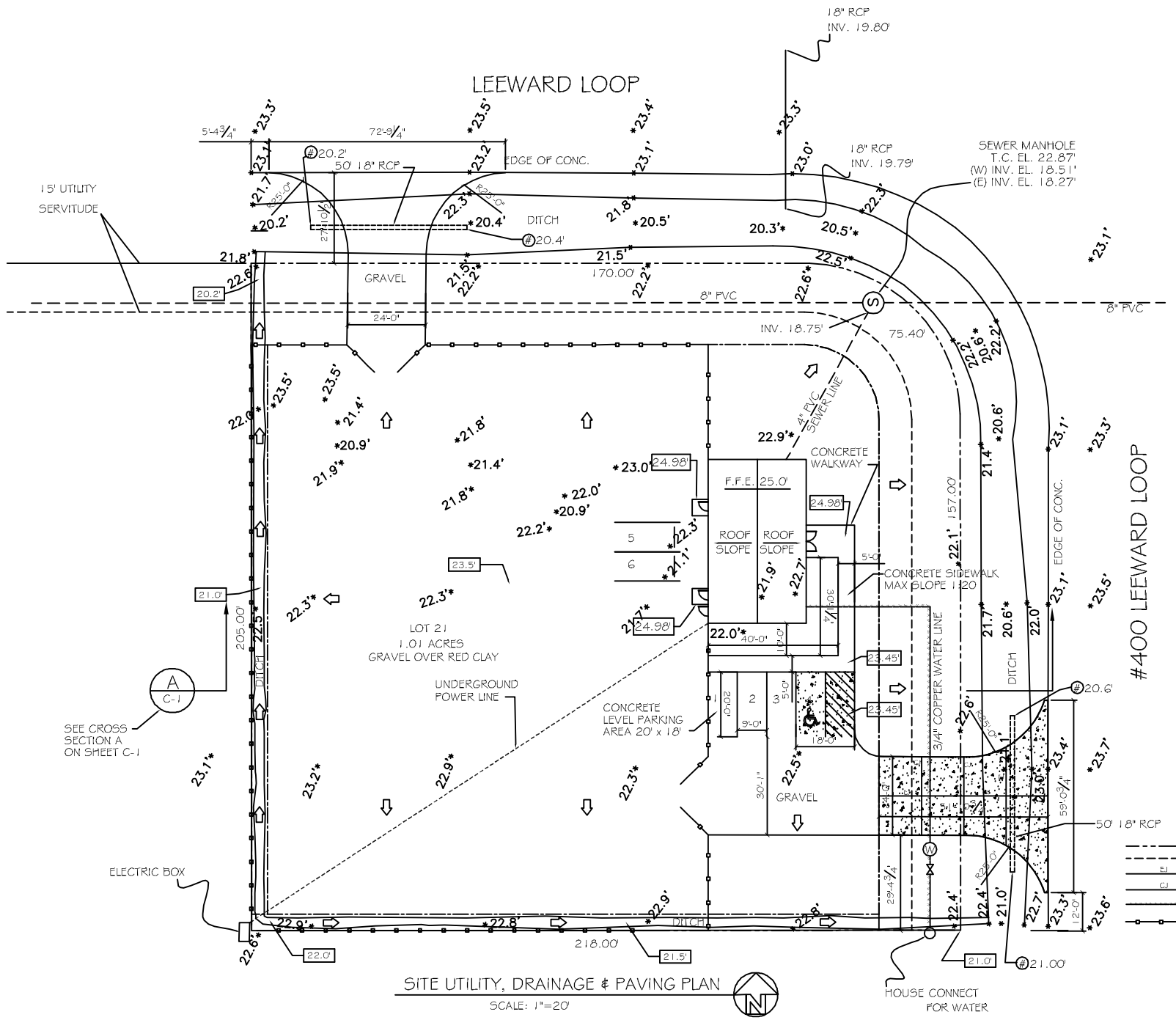

SITE UTILITY, DRAINAGE & PAVING PLAN

SCALE: 1"=20'

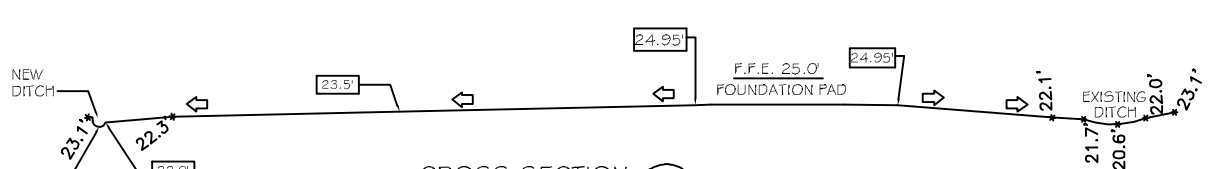

CROSS SECTION A C-1

SCALE: N.T.S.

PAVING NOTES:

1) ALL NEW CONCRETE SHALL SHALL HAVE A MINIMUM COMPRESSIVE STRENGTH OF 4,000 PSI AT 28 DAYS AND A MINIMUM THICKNESS OF 6". CONCRETE MIX SHALL BE IN ACCORDANCE WITH THE LATEST REVISION OF ASTM C-150 TYPE 1.
2) CONCRETE PAVING THICKNESS SHALL VARY AS FOLLOWS:
   a) APRONS = 7" THICKNESS
   b) PARKING AREAS = 6" THICKNESS
3) ALL REINFORCING STEEL SHALL MEET ASTM-A615 (GRADE 60).
4) ALL REINFORCING STEEL SHALL BE SECURELY SUPPORTED TO PREVENT BOTH VERTICAL AND HORIZONTAL MOVEMENT DURING CONCRETE PLACEMENT. ALL CONTROL AND EXPANSION JOINTS SHALL BE LOCATED AND INSTALLED AS SHOWN ON THE PAVING PLAN AND IN ACCORDANCE WITH THE MANUFACTURER'S RECOMMENDATIONS.
5) ALL SUB GRADE FILL SHALL BE SELECT GRANULAR MATERIAL COMPACTED TO 95% STANDARD PROCTOR DENSITY IN A MAXIMUM OF 6" LIFTS.
6) CONTRACTOR SHALL CONTACT THEIR REGULATORY DEPARTMENT OF ENGINEERING PRIOR TO CONDUCTING ANY WORK.
7) ANY WORK WITHIN THE ROADWAY OR ADJACENT TO THE ROADWAY CAUSING AN INTERFERENCE TO VEHICULAR TRAFFIC REQUIRES PRIOR APPROVAL FROM THE CITY TRAFFIC ENGINEERING DIVISION, AND MUST CONFORM TO THE REQUIREMENTS SET FORTH BY THE UNIFORM MANUAL OF TRAFFIC CONTROL DEVICES OF THE STATE OF LOUISIANA. THE CONTRACTOR MUST FURNISH ALL NECESSARY TRAFFIC SIGNS AND/OR BARRICADES AND MAINTAIN THEM DURING CONSTRUCTION ACTIVITY.

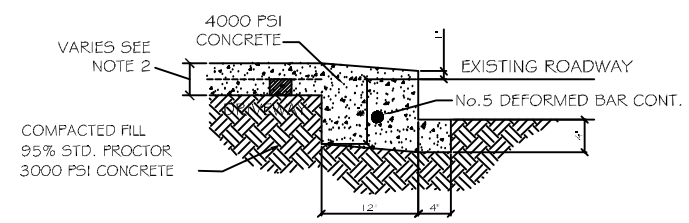

DRIVEWAY SECTION

N. T. S.

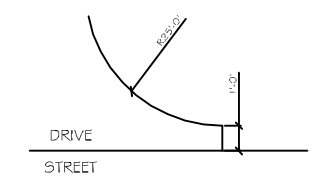

TYPICAL ENTRANCE DETAIL

N.T.S.

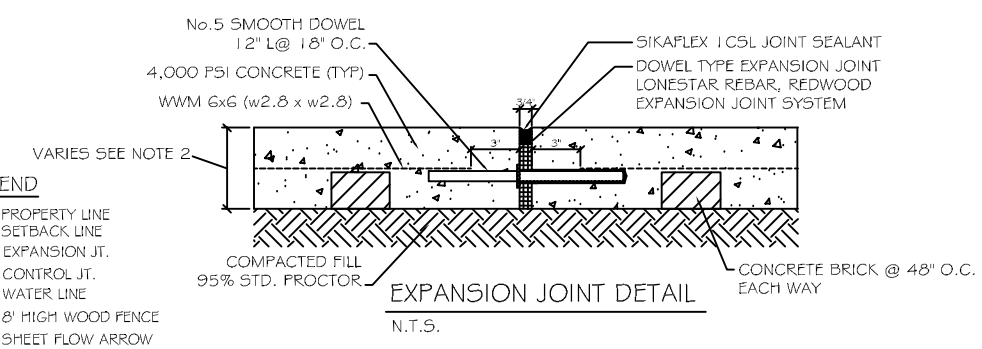

EXPANSION JOINT DETAIL

N.T.S.

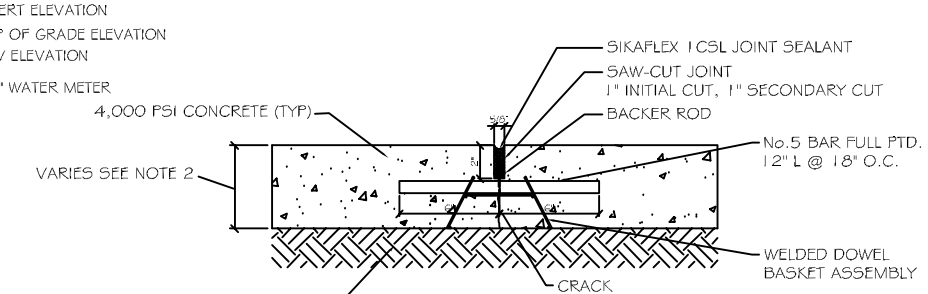

CONTROL JOINT DETAIL

N.T.S.

LEGEND

- PROPERTY LINE
- SETBACK LINE
- EJ — EXPANSION JT.
- CJ — CONTROL JT.
- WATER LINE
- 8' HIGH WOOD FENCE
- SHEET FLOW ARROW
- 0.00' — INVERT ELEVATION
- # 0.00' — TOP OF GRADE ELEVATION
- 00.00 — NEW ELEVATION
- W — 3/4" WATER METER

DAMMON ENGINEERING INC
Architects & Engineers

CHIEF ENGINEER: EMMETT DAMMON, P.E.
CHIEF ARCHITECT: KEVIN NINOMEN
516 OLD SPANISH TRAIL
SLIDELL, LA 70460

dammoneng@bellsouth.net
PHONE: 985-643-9383
FAX: 985-641-5950

LANDIS TRANSPORT LLC
OFFICE/WAREHOUSE BUILDING

LOT 21 #400 LEEWARD LOOP
ST. TAMMANY PARISH, COVINGTON, LOUISIANA

JOB No:	2164	DATE:	01-30-2013
DRAWN BY:	JCT	CHECKED BY:	CD

THESE PLANS AND SPECIFICATIONS ARE THE PROPERTY OF DAMMON ENGINEERING INC. REPRODUCTION OF THESE PLANS AND SPECIFICATIONS IN WHOLE OR IN PART WITHOUT WRITTEN PERMISSION OF DAMMON ENGINEERING INC. IS PROHIBITED. THESE PLANS AND SPECIFICATIONS ARE NOT TO BE USED FOR OTHER WORK OR ADDITIONS TO THIS PROJECT BY OTHERS WITHOUT WRITTEN PERMISSION OF DAMMON ENGINEERING INC.

#	DESCRIPTION	DATE

REVISIONS

SITE & UTILITY PLAN

SHEET No: 3 OF 9

C2