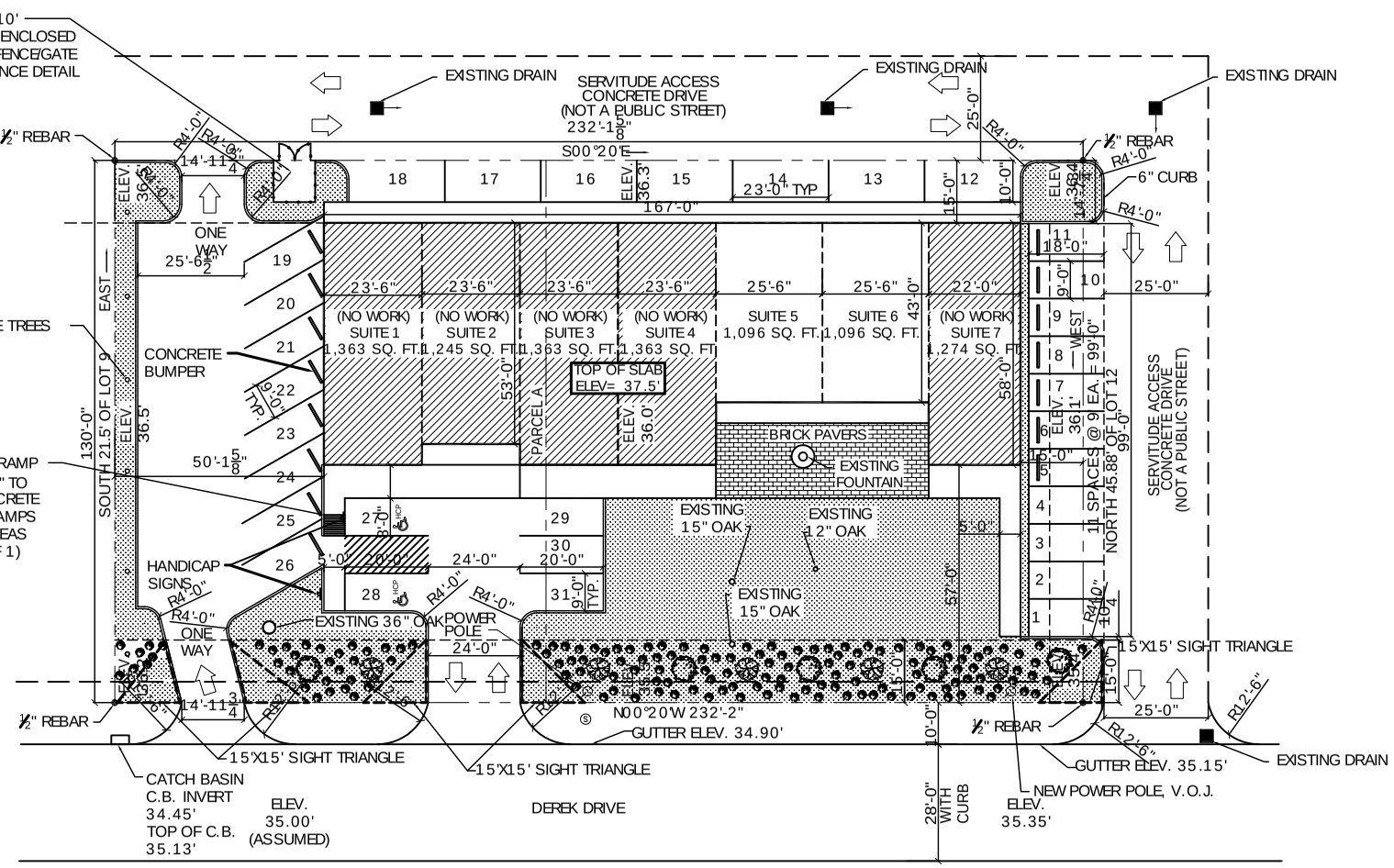

◇ FIRE HYDRANT

EXISTING SITE PLAN

SCALE: 1"= 20'-0"

WITHOUT COVERED PORCHES = 8,800 SQ. FT.
WITH COVERED PORCHES = 9,538 SQ. FT.
REQUIRED 1 PARKING SPACE PER 250 SQ. FT.
REQUIRED PARKING = 35 SPACES
PROVIDED PARKING = 31 SPACES (WITH VARIANCE PROVIDED BY OWNER)

NOTE:
PROVIDE SLEEVES UNDER BOTH ENTRANCE DRIVEWAYS, CO-ORD. WITH IRRIGATION CONTRACTOR AS TO SIZE & TYPE.

BRICK PAVING NOTES:
1. PAVERS TO BE SELECTED BY OWNER.
2. PAVING PATTERN TO BE SELECTED BY OWNER.
3. HANDWORK EXISTING SOIL ONLY UNDER CANOPY OF EXISTING OAK. KEEP DISTURBANCE OF TREE ROOTS TO A MINIMUM.
4. PROVIDE 3" THICK SAND SETTING BED. LIGHTLY COMPACT OR SATURATE WITH WATER.
5. PROVIDE TURNED DOWN (8") PAVER BORDER @ ALL EDGES.
6. GROUT ALL JOINTS SOLID WITH CEMENT MORTAR.
7. CO-ORDINATE WITH UNDERGROUND IRRIGATION CONTRACTOR.

LANDSCAPE LEGEND

- TYPE A OVERSTORY TREES MINIMUM OF 12' HIGH, 2 INCH DIAMETER ONE FOR EVERY 15 LINEAR FEET OF ROAD FRONTAGE AND LANDSCAPED ISLANDS.
- TYPE B UNDERSTORY TREES; MINIMUM OF 12' HIGH, 2 INCH DIAMETER; ONE FOR EVERY 15 LINEAR FEET OF ROAD FRONTAGE
- CONTINUOUS SCREEN OF EVERGREEN SHRUBS A MINIMUM OF THREE FEET IN HEIGHT SHALL BE PLANTED TO SCREEN THE PARKING FROM THE ROADWAY.
- LANDSCAPE FILTER AREA ARE TO INCLUDE A GROUNDCOVER AND LANDSCAPE MATERIAL; EXAMPLES INCLUDE: SOLID SOD, MONKEY GRASS, LIRIOPE, JAPANESE ARDESIA, ASIAN JASMINE OR IRIS.

LEGEND

- PROPERTY LINE
- SETBACK
- NEW BUILDING OUTLINE
- SERVITUDE / EASEMENT
- HANDICAP PARKING
- HANDICAP PARKING SIGN
- TRAFFIC FLOW DIRECTION

NOTE:
SIGNAGE SHALL COMPLY WITH SIGNAGE GUIDELINES

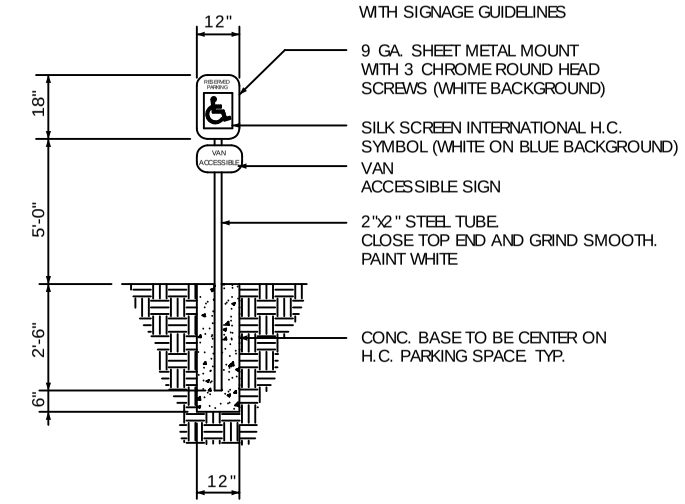

HANDICAP PARKING SIGN

N. T. S.

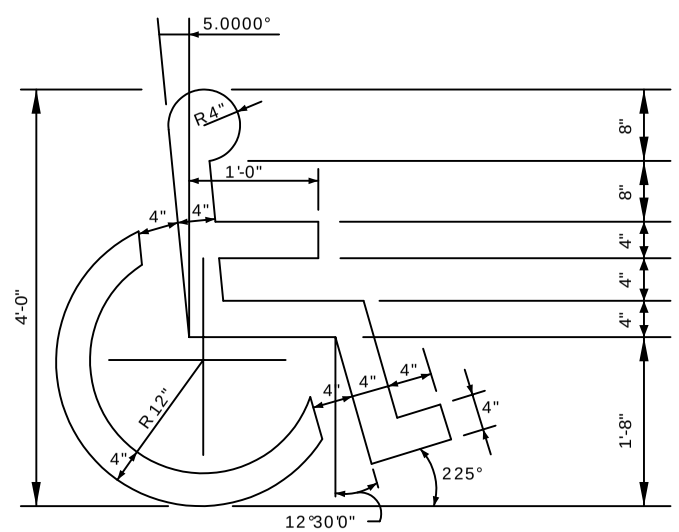

HANDICAP SYMBOL DETAIL

N. T. S.

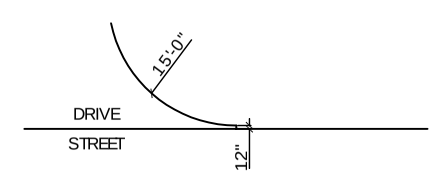

TYPICAL CURB DETAIL

N.T.S.

WORK SITE

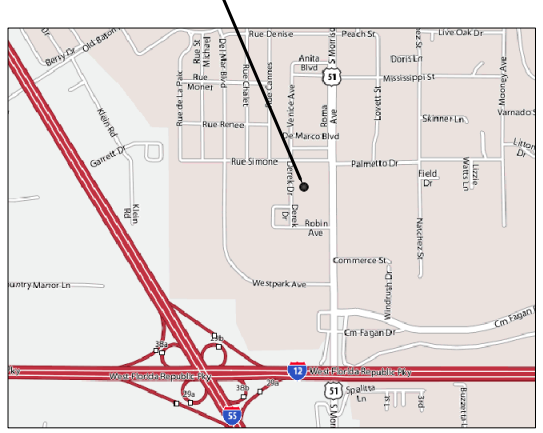

VICINITY MAP

N.T.S.

SITE LIGHTING

EXTERIOR LIGHTING SHALL BE SHADED OR INWARDLY DIRECTED IN SUCH A MANNER SO THAT NO DIRECT LIGHTING OR GLARE BE CAST BEYOND THE PROPERTY LINE. THE INTENSITY OF SUCH LIGHTING SHALL NOT EXCEED ONE FOOT CANDLE AS MEASURED AT THE ABUTTING PROPERTY LINE. (N/A)

LEGAL DESCRIPTION

PARCEL "A" PART OF SURVEY OF THE SOUTH 21.50' OF LOT 9, LOTS 10 AND 11 AND THE NORTH 46.88' OF LOT 12 MEASURES 232.14' FRONT ON DEREK DR. SAME IN REAR BY 130' PARALLEL LINES OF HAMMOND PARK SUBDIVISION IN SEC. 34 T6SR7E CITY OF HAMMOND, LA

DAMMON ENGINEERING, INC.

CHIEF ENGINEER
EMMETT
DAMMON, P.E.

CHIEF ARCHITECT
ROBERT
WILTSE

1095 FLORIDA AVENUE
SLIDELL, LA. 70458
OFFICE: 985-649-5832
FAX: 985-641-5950

WEBSITE:
WWW.DAMMONENGINEERING.COM

EMAIL:
DAMMONENG@BELLSOUTH.NET

ARCHITECTURE
ENGINEERING
STUDIES
PLANNING
INVESTIGATION
EXPERT WITNESS

SUITES 5 - 6
TENANT
BUILDOUT

DEREK DRIVE
PROPERTY
1303/1307 DEREK DR
HAMMOND, LA

SITE
PLAN

REV:

SCALE: AS NOTED
JOB#: 1984
DATE: 12-9-08
SHEET 2

C-1

OF 11