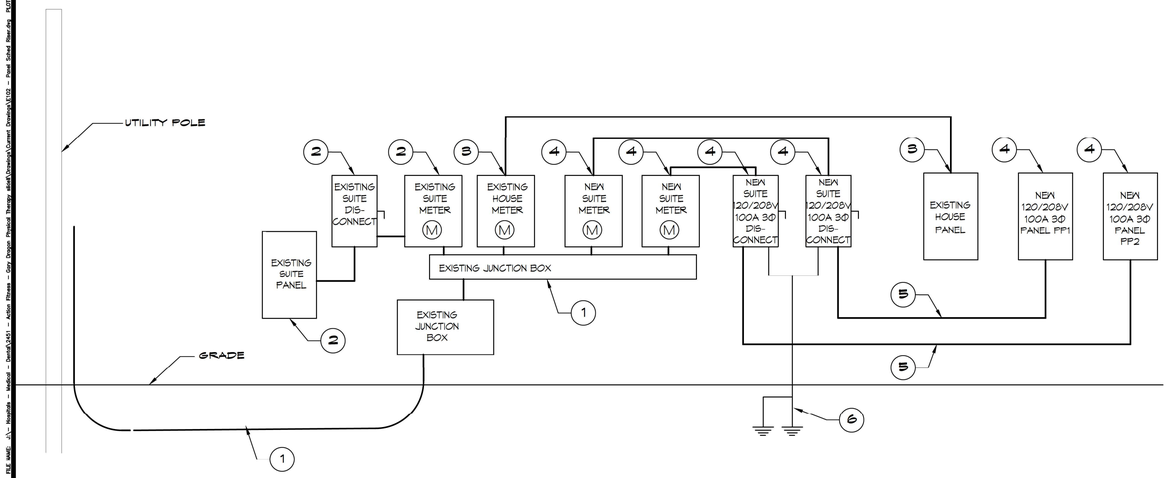

ONE LINE NOTES:

1. EXISTING 120/208V 3Φ 200A SERVICE AND JUNCTION BOXES.
2. EXISTING SUITE 120/208V 3Φ METER, DISCONNECT AND PANELBOARD TO REMAIN.
3. EXISTING HOUSE 120/208V 3Φ METER AND PANELBOARD TO REMAIN.
4. NEW 120/208V 3Φ 100A METER, DISCONNECT AND PANELBOARD.
5. 4-#2 THHN, 1-#8 GND, 1 1/4" C
6. 2 - 3/4" x 10' CU CLAD GND ROD, #2 CU GND WIRE. PROTECT IN PVC PIPE. CONNECT TO METAL BLDG, COLD WATER SUPPLY & GAS LINE. CAD WELD ALL CONNECTIONS.

14 RISER DIAGRAM

SCALE: NONE

PANEL SCHEDULE

PANEL: PP-A1
LOCATION: BACK WALL, LEFT SIDE
FEEDER SOURCE:

VOLTAGE: 120/208V 3Φ, 4 WIRE
ENCLOSURE: SURFACE MOUNTED, 100 Amp; W/ EQUIP GND BAR SQ D TYPE QO LOAD CENTER

CKT NO	THHN WIRE SIZE	LOAD DESCRIPTION: LOCATION	BREAKER: AMP	BREAKER: POLE	LOAD (kva)		LOAD (kva)	BREAKER: POLE	BREAKER: AMP	LOAD DESCRIPTION: LOCATION	THHN WIRE SIZE	CKT NO
1					3.8		2.6					2
3	#8	LEFT SIDE HVAC UNIT, AHU #1 W/HEAT	35	3	3.8		2.6	3	30	LEFT SIDE HEAT PUMP, CU-1	#10	4
5					3.8		2.6					6
7	#12	LEFT SIDE LIGHTS, TREATMENT ROOM, RESTROOM, AND OFFICES	20	1	1.7		0.4	1	20	LEFT SIDE DEDICATED RECEPTACLE, BACK OFFICE	#12	8
9	#12	LEFT SIDE DEDICATED RECEPTACLE, FRONT OFFICE	20	1	0.4		3.4	1	30	TANKLESS WATER HEATER, RESTROOM	#10	10
11	#12	LEFT SIDE RECEPTACLES, TREATMENT ROOM	20	1	0.9		-	-	-	SPARE	-	12
13	-	SPARE	-	-	-		-	-	-	SPARE	-	14
15	-	SPARE	-	-	-		-	-	-	SPARE	-	16
17	-	SPARE	-	-	-		-	-	-	SPARE	-	18
19	-	SPARE	-	-	-		-	-	-	SPARE	-	20
21	-	SPARE	-	-	-		-	-	-	SPARE	-	22
23	-	SPARE	-	-	-		-	-	-	SPARE	-	24

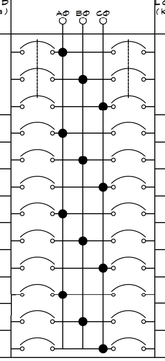

SOLID NEUTRAL
NEUTRAL WIRE (N)

TOTAL CONNECTED LOAD (kva) = 26.0

AΦ = 8.5 | BΦ = 10.2 | CΦ = 7.3

GROUND BUS
GROUND WIRE (G)

PANEL SCHEDULE

PANEL: PP-A2
LOCATION: BACK WALL, RIGHT SIDE
FEEDER SOURCE:

VOLTAGE: 120/208V 3Φ, 3 WIRE
ENCLOSURE: SURFACE MOUNTED, 100 Amp; W/ EQUIP GND BAR SQ D TYPE QO LOAD CENTER

CKT NO	THHN WIRE SIZE	LOAD DESCRIPTION: LOCATION	BREAKER: AMP	BREAKER: POLE	LOAD (kva)		LOAD (kva)	BREAKER: POLE	BREAKER: AMP	LOAD DESCRIPTION: LOCATION	THHN WIRE SIZE	CKT NO
1					3.8		2.6					2
3	#8	RIGHT SIDE HVAC UNIT, AHU #1 W/HEAT	35	3	3.8		2.6	3	30	RIGHT SIDE HEAT PUMP, CU-1	#10	4
5					3.8		2.6					6
7	#12	RIGHT SIDE LIGHTS, TREATMENT ROOM, AND OFFICES	20	1	1.7		0.4	1	20	RIGHT SIDE DEDICATED RECEPTACLE, BACK OFFICE	#12	8
9	#12	RIGHT SIDE RECEPTACLES, TREATMENT ROOM	20	1	1.3		-	-	-	SPARE	-	10
11	-	SPARE	-	-	-		-	-	-	SPARE	-	12
13	-	SPARE	-	-	-		-	-	-	SPARE	-	14
15	-	SPARE	-	-	-		-	-	-	SPARE	-	16
17	-	SPARE	-	-	-		-	-	-	SPARE	-	18
19	-	SPARE	-	-	-		-	-	-	SPARE	-	20
21	-	SPARE	-	-	-		-	-	-	SPARE	-	22
23	-	SPARE	-	-	-		-	-	-	SPARE	-	24

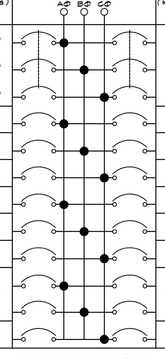

SOLID NEUTRAL
NEUTRAL WIRE (N)

TOTAL CONNECTED LOAD (kva) = 22.6

AΦ = 8.5 | BΦ = 7.7 | CΦ = 6.4

GROUND BUS
GROUND WIRE (G)

DAMMON ENGINEERING, INC.
LOUISIANA & MISSISSIPPI
www.dammonengineering.com
info@dammonengineering.com
PH: 985.649.5832
Chief Engineer: Brian Mistich, PE
5454 Ofis South Trail
Slidell, LA 70458

#	DESCRIPTION	DATE
	REVISIONS	

SEAL:

STATE OF LOUISIANA
BRIAN A. MISTICH
License No. 30187
PROFESSIONAL ENGINEER

RENOVATION
AUTISM PHYSICAL THERAPY & SPORTS MEDICINE
107 SOUTH MILITARY RD
SLIDELL, LA 70461

JOB No: 2451 | DATE: 11-09-2021
DRAWN BY: AEP | CHECKED BY: CKD

These drawings and specifications are the property and copyright of Dammon Engineering and shall not be used for other projects or extensions of this project except by agreement in writing and appropriate compensation to Dammon Engineering. These drawings and specifications are not to be used for any other project, for which they have been prepared and developed without written consent of Dammon Engineering. Visual contact with these drawings and specifications shall constitute prima facie evidence of acceptance of these restrictions.

SHEET TITLE:
PANEL SCHEDULE, ONE LINE DIAGRAM AND ELEC. LOAD SUMMARY

DRAWING NUMBER:
E102

SHEET No: 8 of 8