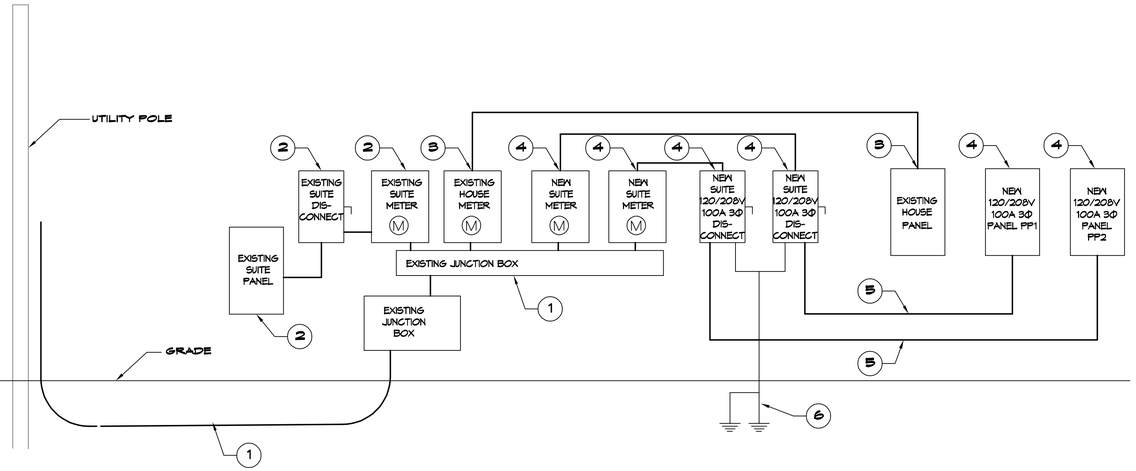

14 RISER DIAGRAM

SCALE: NONE

ONE LINE NOTES:

1. EXISTING 120/208V 3Φ 200A SERVICE AND JUNCTION BOXES.
2. EXISTING SUITE 120/208V 3Φ METER, DISCONNECT AND PANELBOARD TO REMAIN.
3. EXISTING HOUSE 120/208V 3Φ METER AND PANELBOARD TO REMAIN.
4. NEW 120/208V 3Φ 100A METER, DISCONNECT AND PANELBOARD.
5. 4-#2 THHN, 1-#8 GND, 1 1/4" C
6. 2 - 3/4" x 10' CU CLAD GND ROD, #2 CU GND WIRE. PROTECT IN PVC PIPE. CONNECT TO METAL BLDG, COLD WATER SUPPLY & GAS LINE. CAD WELD ALL CONNECTIONS.

PANEL SCHEDULE

PANEL: PP - S3
LOCATION: BACK WALL OF SUITE 3
FEEDER SOURCE:

VOLTAGE: 120/208V 3Φ, 4 WIRE
ENCLOSURE: SURFACE MOUNTED, 100 Amp; W/ EQUIP GND BAR SQ D TYPE QO LOAD CENTER

CKT NO	THHN WIRE SIZE	LOAD DESCRIPTION LOCATION	BREAKER AMP	BREAKER POLE	LOAD (kva)	LOAD (kva)	BREAKER POLE	BREAKER AMP	LOAD DESCRIPTION LOCATION	THHN WIRE SIZE	CKT NO
1	#8	SUITE 3 HVAC UNIT, AHU #1 W/HEAT	35	3	3.8	2.6	3	30	SUITE 3 HEAT PUMP, CU-1	#10	2
3					3.8	2.6					4
5					3.8	2.6					6
7	#12	SUITE 3 LIGHTS, TREATMENT ROOM AND RESTROOM	20	1	2.8	3.4	1	30	SUITE 3 TANKLESS WATER HEATER, RESTROOM	#10	8
9	#12	SUITE 3 RECEPTACLES, TREATMENT ROOM	20	1	1.1	-	-	-	SPARE	-	10
11	-	SPARE	-	-	-	-	-	-	SPARE	-	12
13	-	SPARE	-	-	-	-	-	-	SPARE	-	14
15	-	SPARE	-	-	-	-	-	-	SPARE	-	16
17	-	SPARE	-	-	-	-	-	-	SPARE	-	18
19	-	SPARE	-	-	-	-	-	-	SPARE	-	20
21	-	SPARE	-	-	-	-	-	-	SPARE	-	22
23	-	SPARE	-	-	-	-	-	-	SPARE	-	24

SOLID NEUTRAL
NEUTRAL WIRE (N)

TOTAL CONNECTED LOAD (kva) = 26.0

AΦ = 11.5 | BΦ = 4.5 | CΦ = 6.4

GROUND BUS
GROUND WIRE (G)

PANEL SCHEDULE

PANEL: PP - S2
LOCATION: BACK WALL OF SUITE 2
FEEDER SOURCE:

VOLTAGE: 120/208V 3Φ, 3 WIRE
ENCLOSURE: SURFACE MOUNTED, 100 Amp; W/ EQUIP GND BAR SQ D TYPE QO LOAD CENTER

CKT NO	THHN WIRE SIZE	LOAD DESCRIPTION LOCATION	BREAKER AMP	BREAKER POLE	LOAD (kva)	LOAD (kva)	BREAKER POLE	BREAKER AMP	LOAD DESCRIPTION LOCATION	THHN WIRE SIZE	CKT NO
1	#8	SUITE 2 HVAC UNIT, AHU #1 W/HEAT	35	3	3.8	2.6	3	30	SUITE 2 HEAT PUMP, CU-1	#10	2
3					3.8	2.6					4
5					3.8	2.6					6
7	#12	SUITE 2 LIGHTS, TREATMENT ROOM AND RESTROOM	20	1	3.2	0.4	1	20	SUITE 2 DEDICATED RECEPTACLE, OFFICE 1	#12	8
9	#12	SUITE 2 RECEPTACLES, TREATMENT ROOM	20	1	1.1	0.4	1	20	SUITE 2 DEDICATED RECEPTACLE, OFFICE 2	#12	10
11	#10	SUITE 2 TANKLESS WATER HEATER, RESTROOM	30	1	3.4	-	-	-	SPARE	-	12
13	-	SPARE	-	-	-	-	-	-	SPARE	-	14
15	-	SPARE	-	-	-	-	-	-	SPARE	-	16
17	-	SPARE	-	-	-	-	-	-	SPARE	-	18
19	-	SPARE	-	-	-	-	-	-	SPARE	-	20
21	-	SPARE	-	-	-	-	-	-	SPARE	-	22
23	-	SPARE	-	-	-	-	-	-	SPARE	-	24

SOLID NEUTRAL
NEUTRAL WIRE (N)

TOTAL CONNECTED LOAD (kva) = 26.2

AΦ = 8.5 | BΦ = 7.9 | CΦ = 9.8

GROUND BUS
GROUND WIRE (G)

DAMMON ENGINEERING, INC.
LOUISIANA & MISSISSIPPI
www.dammonengineering.com
info@dammonengineering.com
PH: 985.649.5832
Chief Engineer: Brian Mistich, PE
5540 Clusserath Trail
Slidell, LA 70458

#	DESCRIPTION	DATE

REVISIONS

STATE OF LOUISIANA
BRIAN A. MISTICH
License No. 30187
PROFESSIONAL ENGINEER

RENOVATION
AUTION PHYSICAL THERAPY & SPORTS MEDICINE
101 SOUTH MILITARY RD.
SLIDELL, LA 70461

JOB No: 2451 | DATE: 11-22-2021
DRAWN BY: AEP | CHECKED BY: CKD

These plans remain the property of Dammon Engineering, and are not to be used or reproduced in any form without written consent. Ownership of these plans shall remain with Dammon Engineering, and are not to be used on any other project for which the have been prepared and developed without written consent of Dammon Engineering. Visual contact with these plans shall constitute conclusive evidence of acceptance of these restrictions.

SHEET TITLE:
PANEL SCHEDULE, ONE LINE DIAGRAM AND ELEC. LOAD SUMMARY

DRAWING NUMBER:
E102

SHEET No: 8 of 8