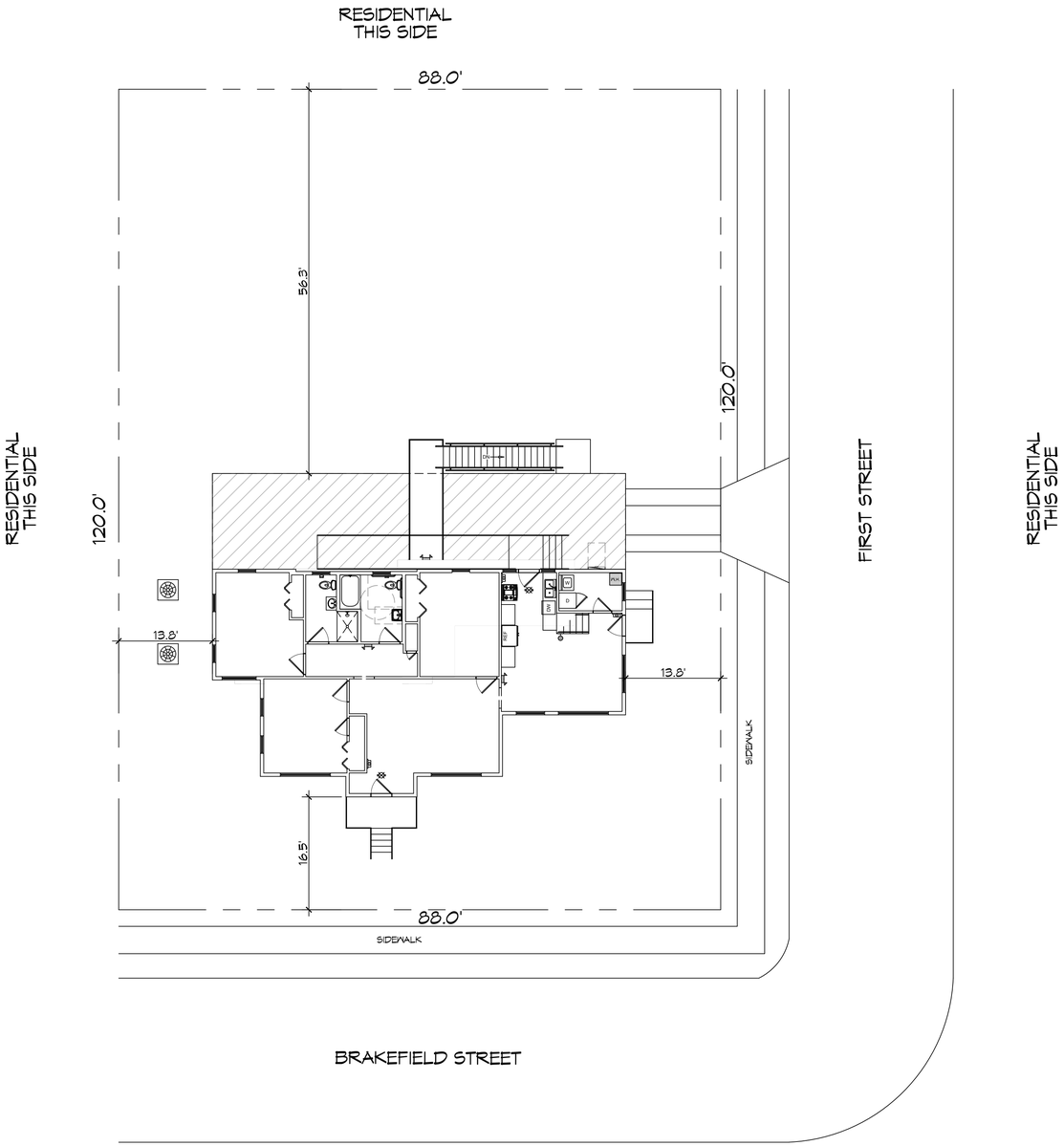

1 EXISTING SITE PLAN
SCALE: 1" = 10'-0"

PARKING

ACTION PHYSICAL THERAPY AND SPORTS MEDICINE
1 SPACE PER REQUIRED 200 SQ. FT. OF BUILDING
AREA: 5077 SQ. FT. / 200 = 25 REQUIRED

OFFICE/PROFESSIONAL OFFICE AND/OR GROUPS OF BUILDINGS OF SIMILAR NATURE:

1 SPACE PER EACH 350 SQ. FT. OF GROSS FLOOR AREA EXCLUDING STORAGE AREAS WHICH SHALL NOT EXCEED 15 PERCENT OF THE GROSS SQUARE FOOTAGE.

AREA: 1423 SQ. FT. / 350 = 4 REQUIRED

29 REQUIRED PARKING PLACES FOR ALL SUITES

32 PARKING SPACES PROVIDED FOR WHOLE SITE

DAMMON ENGINEERING, INC.
LOUISIANA & MISSISSIPPI
Chief Engineer: Brian Mistich, PE
554 Old Spanish Trail
Slidell, LA 70458
www.dammonengineering.com
info@dammonengineering.com
PH: 985.649.5832

REVISIONS

#	DESCRIPTION	DATE
1		

SEAL:

EXISTING BUILDING
MIDWIFE GRACE COLLECTIVE
340 BRAKEFIELD ST
SLIDELL, LA 70458

JOB No:	2022	DATE:	08-25-2022
DRAWN BY:	CKD	CHECKED BY:	JMS

SHEET TITLE:
EXISTING SITE PLAN

DRAWING NUMBER:
C101

SHEET No: 3 of 1

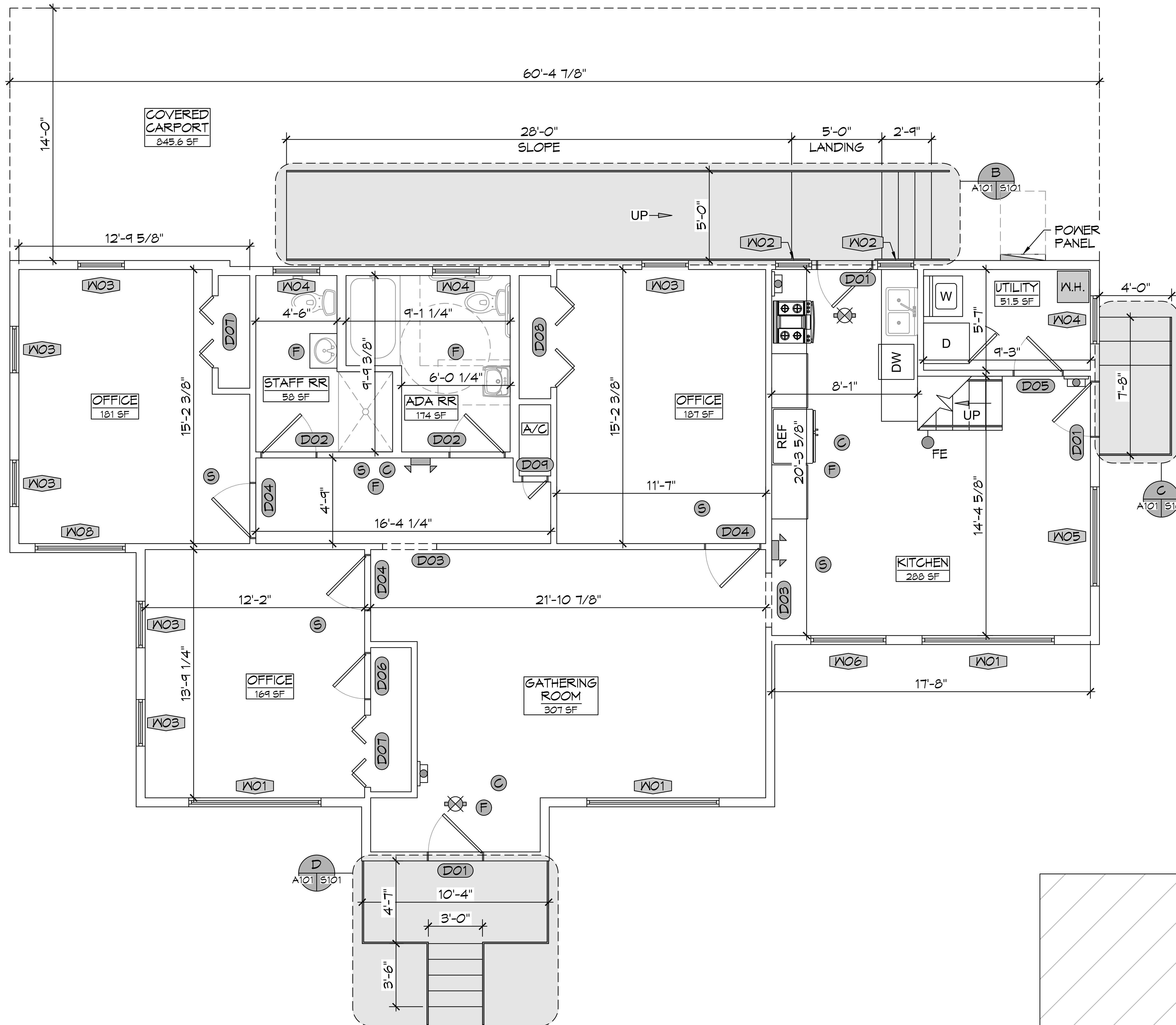

2 LEVEL ONE - EXISTING FLOOR PLAN

SCALE: 1/4" = 1'-0"

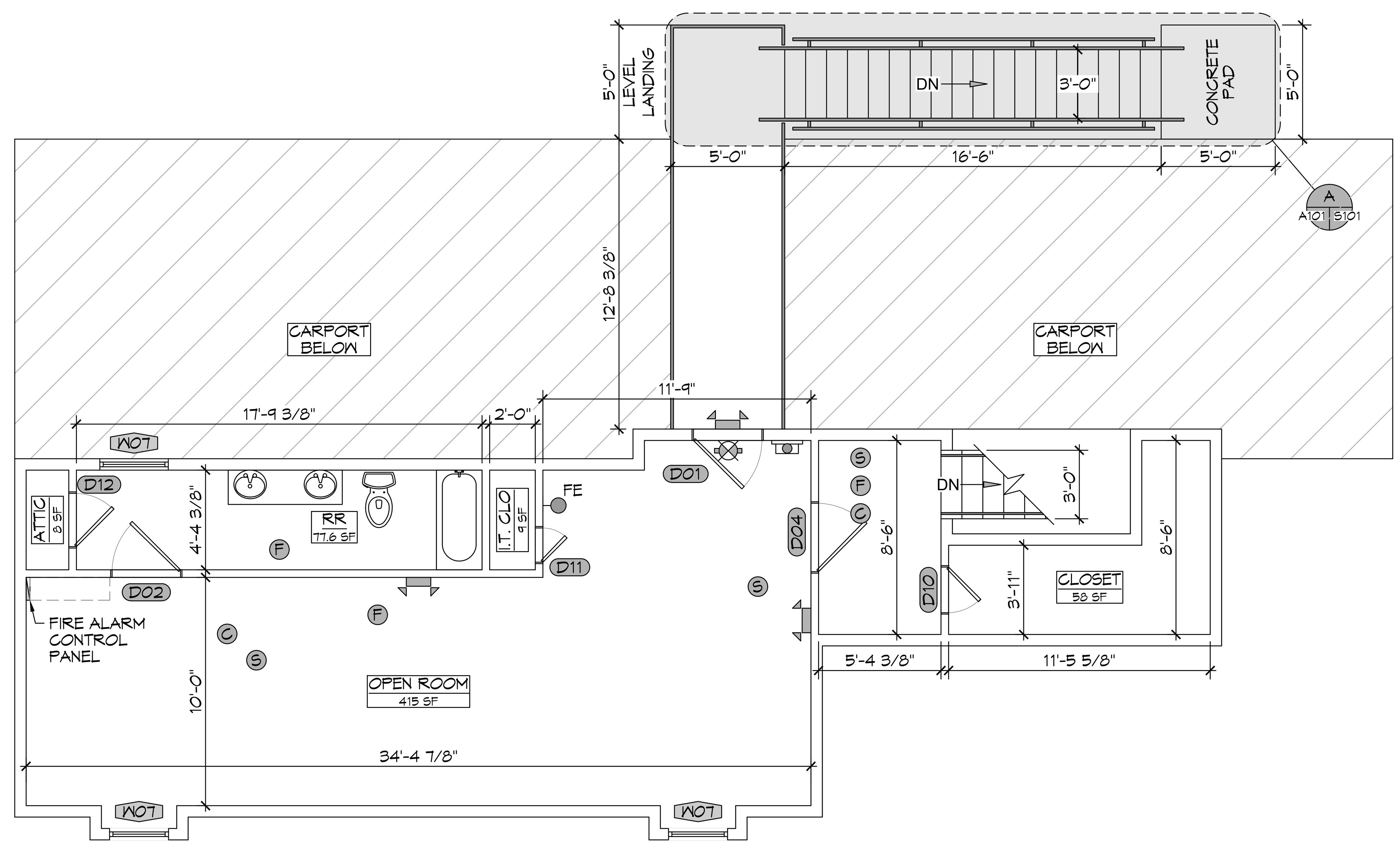

3 LEVEL TWO - EXISTING FLOOR PLAN

SCALE: 1/4" = 1'-0"

EXISTING WINDOW SCHEDULE

MK	WIDTH	HEIGHT	REMARKS
W01	7'-4"	4'-4"	FIXED WINDOW
W02	2'-0"	3'-0"	OPERABLE SIDELIGHT
W03	2'-7"	4'-4"	OPERABLE WINDOW
W04	2'-7"	4'-4"	OPERABLE RR WINDOW
W05	5'-6'	4'-4"	FIXED WINDOW
W06	4'-2"	4'-4"	FIXED WINDOW
W07	2'-6"	2'-6"	OPERABLE WINDOW

EXISTING DOOR SCHEDULE

MK	WIDTH	HEIGHT	DOOR MAT	FRAME	FR	REMARKS
D01	3'-0"	8'-0"	MASONITE	STEEL	NR	ENTRY DOOR
D02	3'-0"	6'-8"	WOOD	STEEL	NR	ADA RR DOOR
D03	3'-0"	6'-8"	WOOD	STEEL	NR	CASED OPENING
D04	3'-0"	6'-8"	WOOD	STEEL	NR	OFFICE DOOR
D05	2'-8"	6'-8"	WOOD	STEEL	NR	UTILITY DOOR
D06	2'-6"	6'-8"	WOOD	STEEL	NR	CLOSET DOOR
D07	4'-0"	6'-8"	WOOD	STEEL	NR	BI-FOLD DOOR
D08	5'-6"	6'-8"	WOOD	STEEL	NR	BI-FOLD DOOR
D09	1'-4"	4'-0"	WOOD	STEEL	NR	A/C CLOSET DOOR
D10	2'-0"	6'-8"	WOOD	STEEL	NR	CLOSET DOOR
D11	1'-6"	6'-8"	WOOD	STEEL	NR	I.T. CLOSET DOOR
D12	2'-4"	5'-8"	WOOD	STEEL	NR	ATTIC ACCESS DOOR

LEGEND

- WALL MOUNTED EMERGENCY LIGHT
- CEILING MOUNTED EXIT LIGHT
- FIRE ALARM PULL
- WALL MOUNTED FIRE EXTINGUISHER
- CEILING MOUNTED FIRE ALARM
- CEILING MOUNTED SMOKE ALARM
- CEILING MOUNTED CARBON MONOXIDE ALARM

DAMMON ENGINEERING, INC.
LOUISIANA & MISSISSIPPI
Chief Engineer: Brian Mistich, PE
554 Old Spanish Trail
Slidell, LA 70458
www.dammonengineering.com
info@dammonengineering.com
PH: 985.649.5832

#	DESCRIPTION	DATE

REVISIONS

SEAL:

EXISTING BUILDING

MIDWIFE GRACE COLLECTIVE

340 BRAKEFIELD ST
SLIDELL, LA 70458

JOB No:	2022	DATE:	08-25-2022
DRAWN BY:	TNT	CHECKED BY:	JMS

The above drawings and specifications, designs and arrangements represented thereby are and shall remain the property of Dammon Engineering, and no part thereof shall be copied, disclosed to others, or used in connection with any work or project other than the specific project for which the have been prepared and developed without written consent of Dammon Engineering. Visual contact with these drawings or specifications shall constitute conclusive evidence of acceptance of these restrictions.

SHEET TITLE:
EXISTING FLOOR PLAN

DRAWING NUMBER:

A101

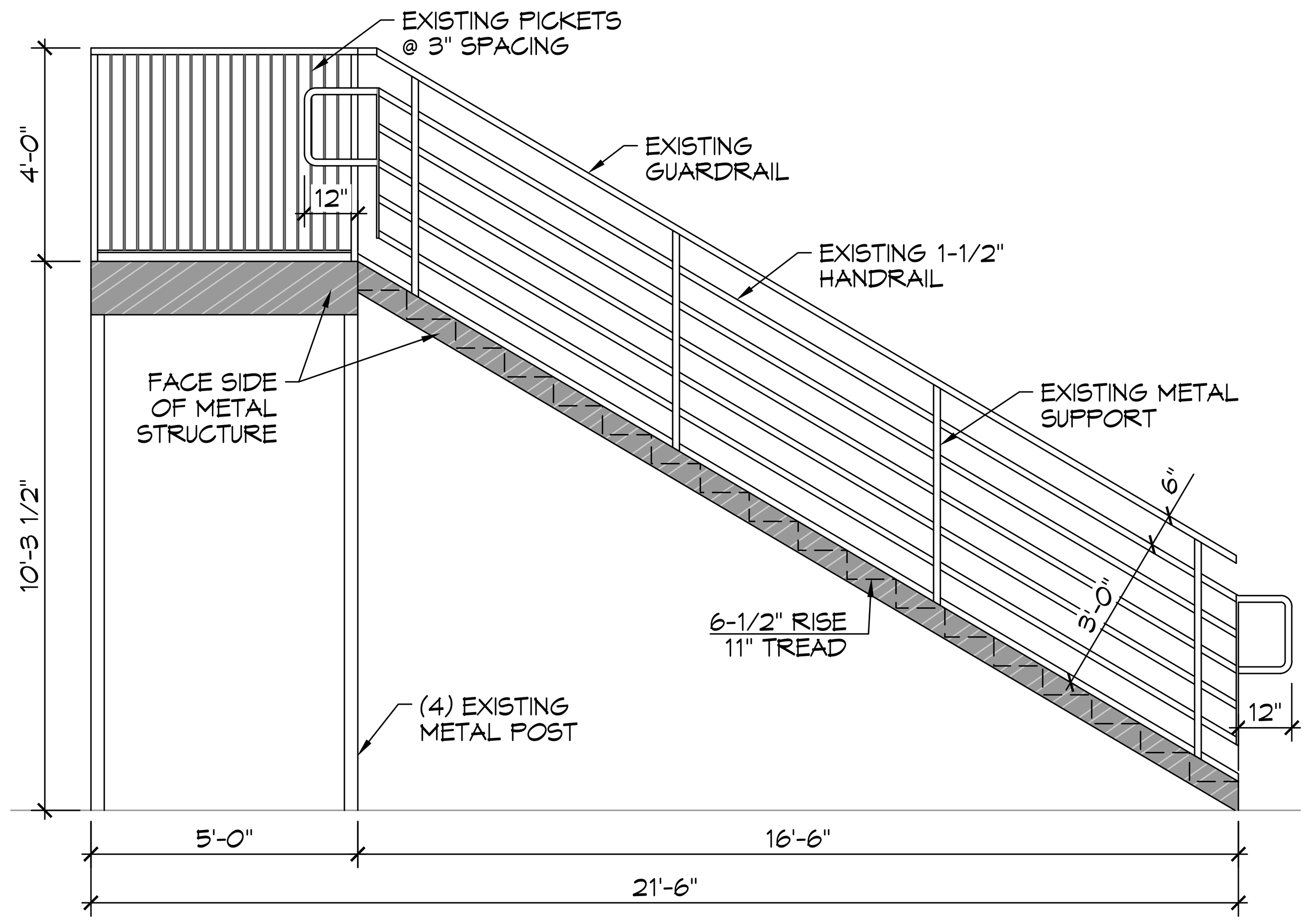

2 LEVEL TWO STAIR PLAN
SCALE: 3/8"= 1'-0" EXISTING

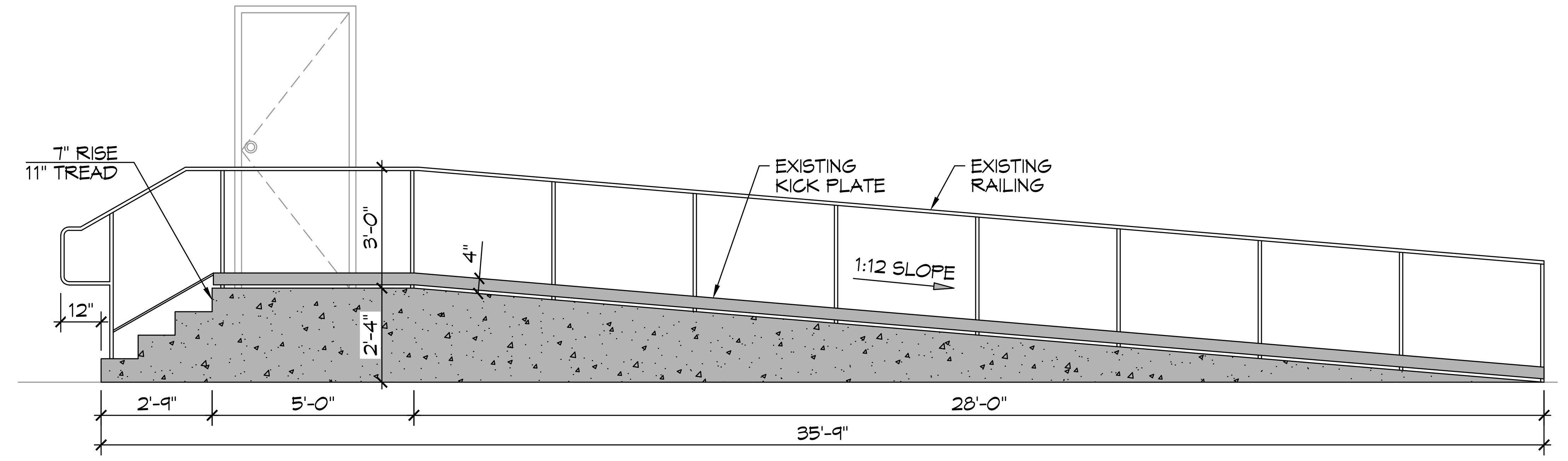

3 REAR STAIR & RAMP ELEVATION
SCALE: 3/8"= 1'-0" EXISTING

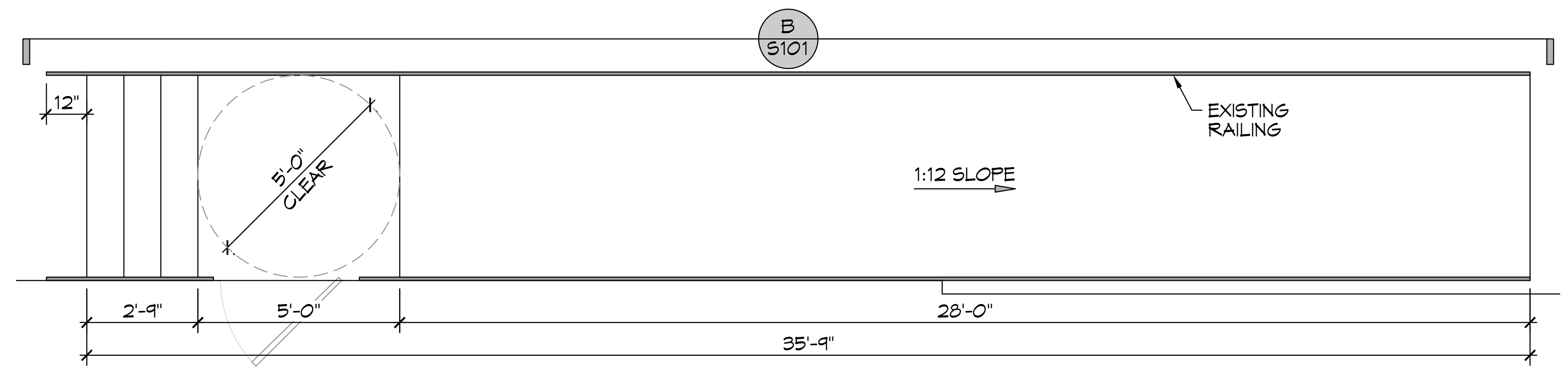

B REAR STAIR & RAMP PLAN
S101 A101 SCALE: 3/8" = 1'-0" EXISING

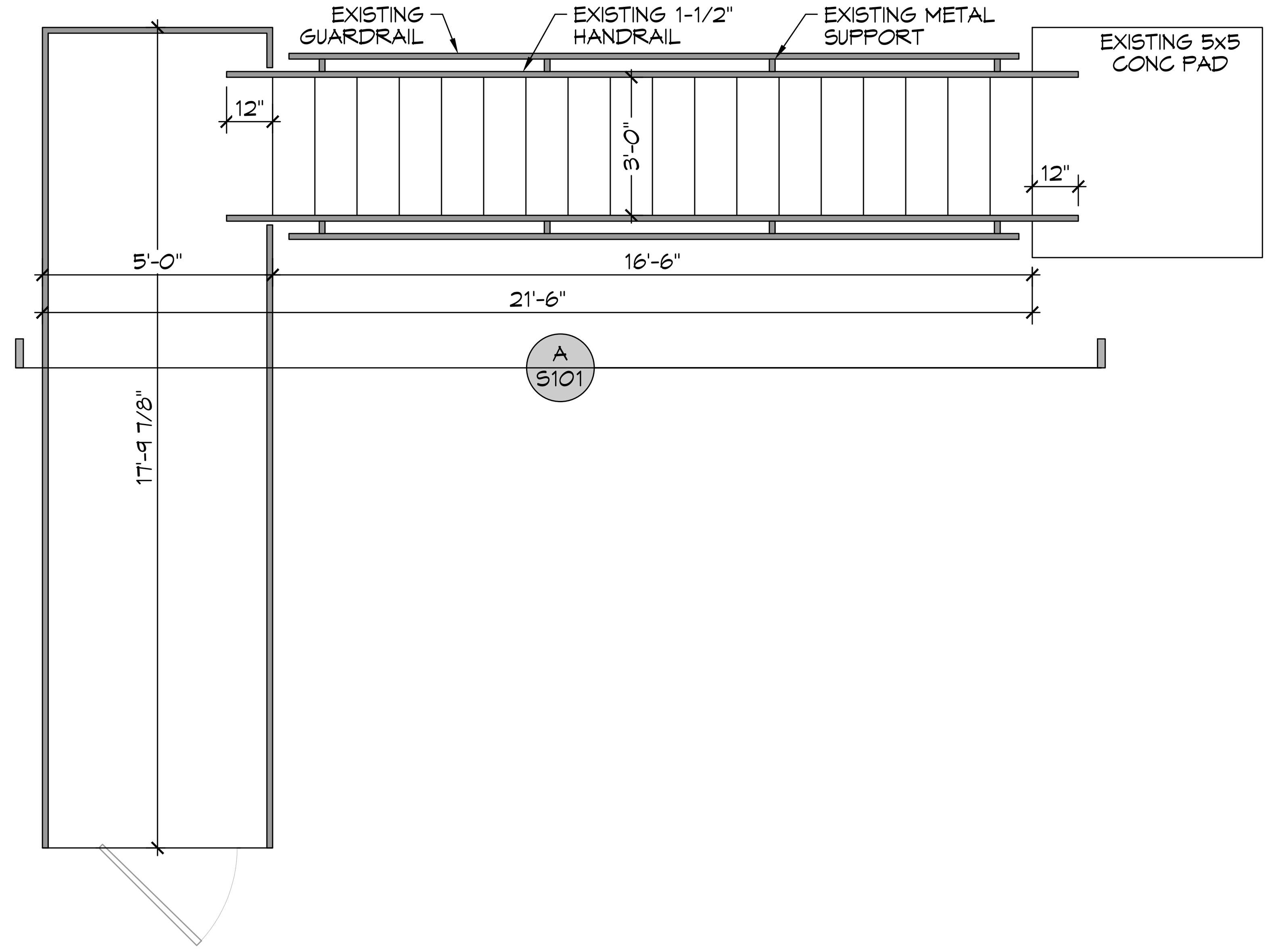

A LEVEL TWO STAIR PLAN
S101 A101 SCALE: 3/8" = 1'-0" EXISTING

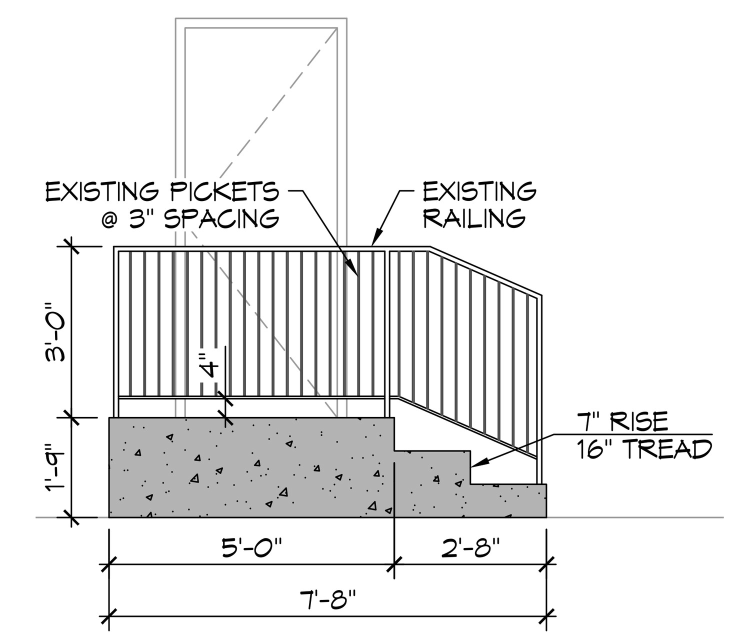

4 SIDE STAIR ELEVATION
SCALE: 3/8"= 1'-0" EXISTING

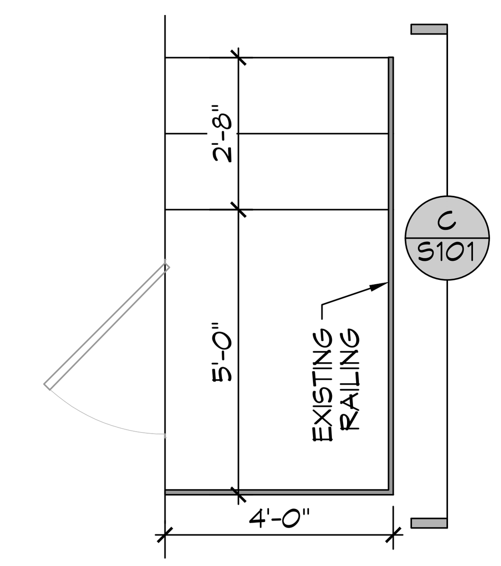

C SIDE STAIR PLAN
S101 A101 SCALE: 3/8" = 1'-0" EXISTING

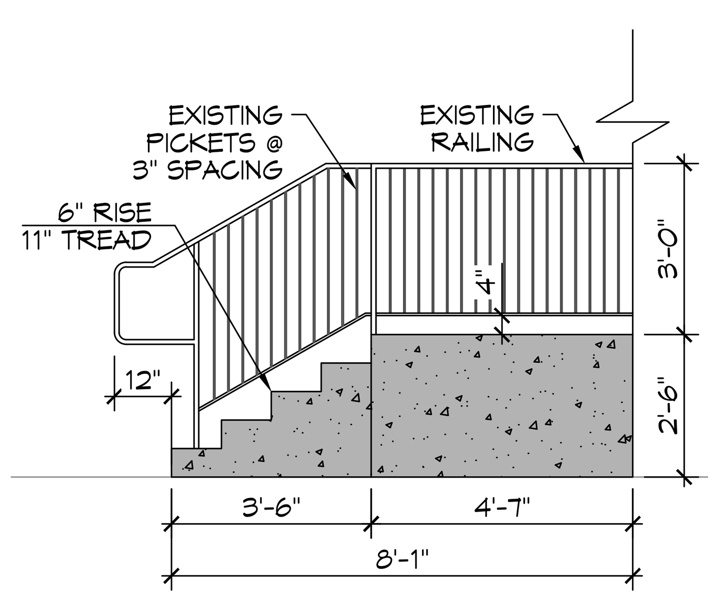

5 FRONT STAIR ELEVATION
SCALE: 3/8"= 1'-0" EXISTING

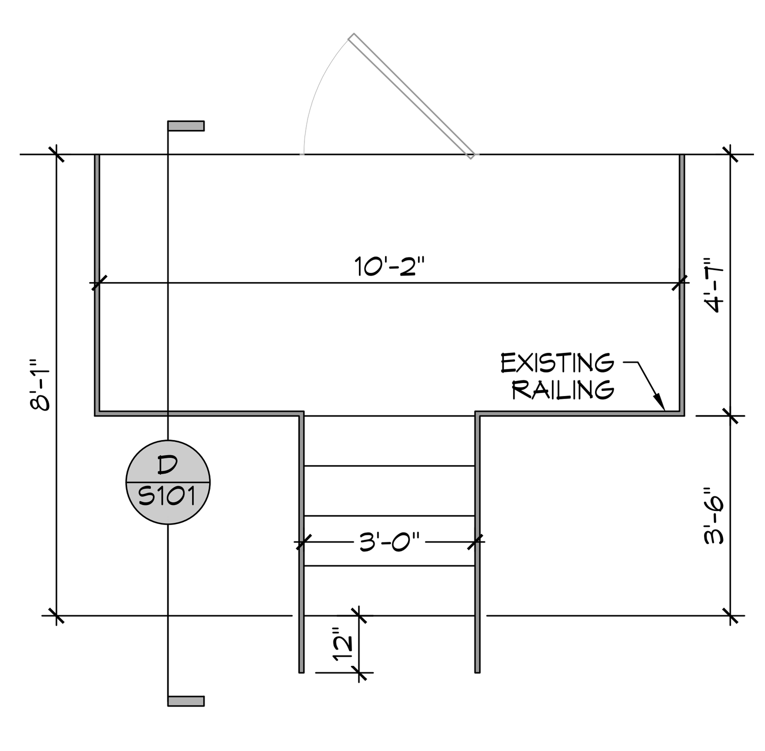

D FRONT STAIR PLAN
S101 A101 SCALE: 3/8" = 1'-0" EXISTING

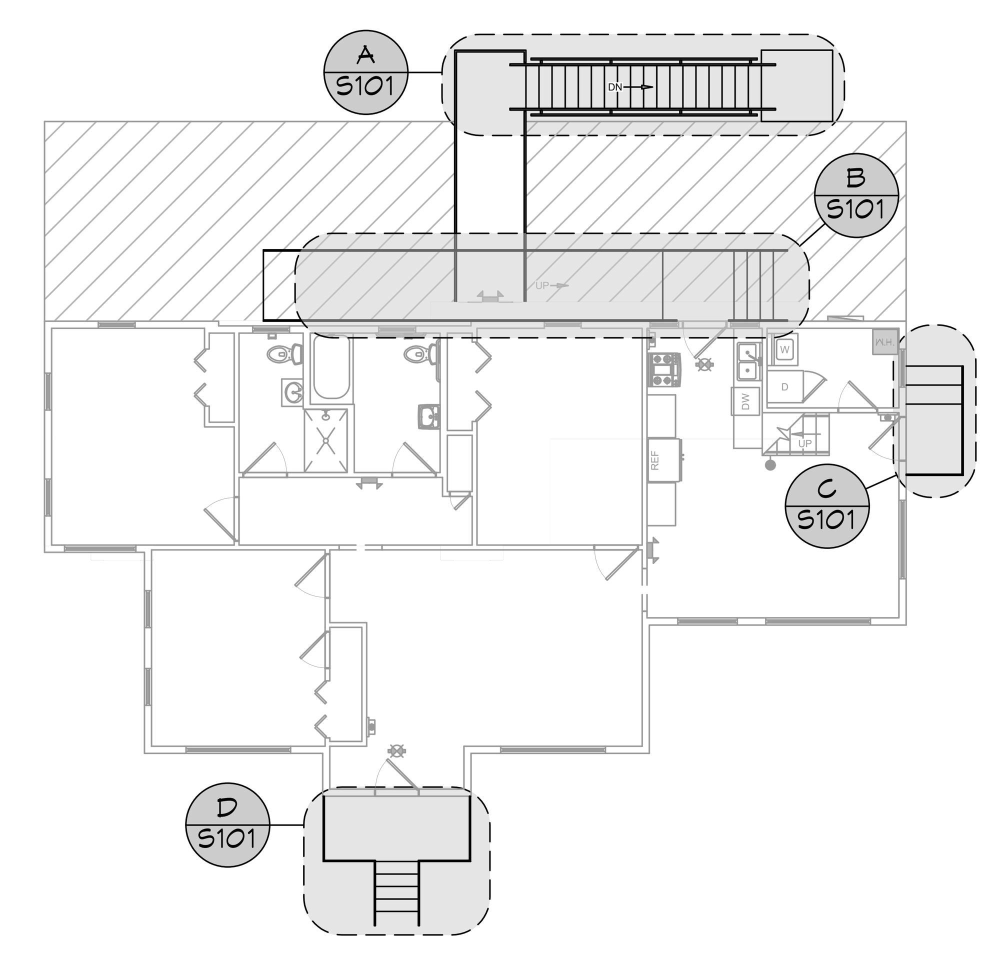

EXISTING KEY PLAN
SCALE: 3/32"= 1'-0"

DAMMON ENGINEERING, INC.
LOUISIANA & MISSISSIPPI
Chief Engineer: Brian Mistich, PE
554 Old Spanish Trail
Slidell, LA 70458
www.dammonengineering.com
info@dammonengineering.com
PH: 985.649.5832

#	DESCRIPTION	REVISIONS	DATE

SEAL:

EXISTING BUILDING
MIDWIFE GRACE COLLECTIVE
340 BRAKEFIELD ST
SLIDELL, LA 70458

JOB No:	2022	DATE:	08-25-2022
DRAWN BY:	TNT	CHECKED BY:	CAD

SHEET TITLE:
EXISTING ADA RAMP & STAIR PLAN

DRAWING NUMBER:
S101

SHEET No: 4 of 1