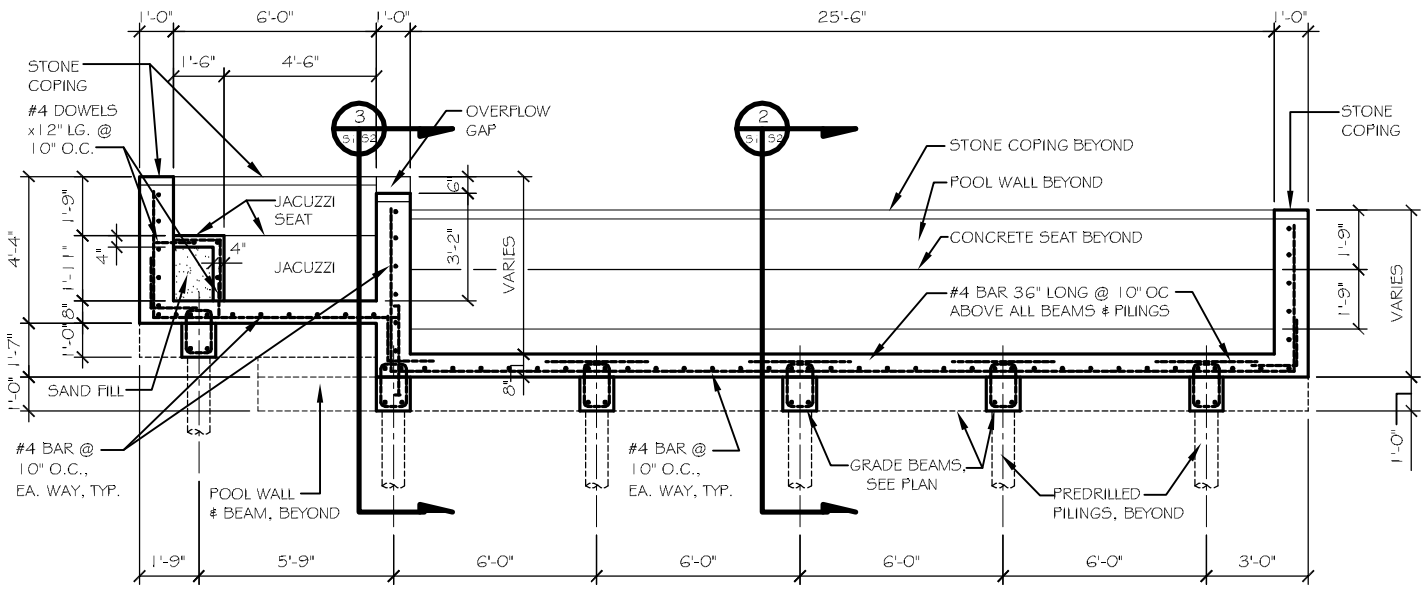

POOL CROSS-SECTION 1 (S1 S2)

SCALE: 3/8"=1'

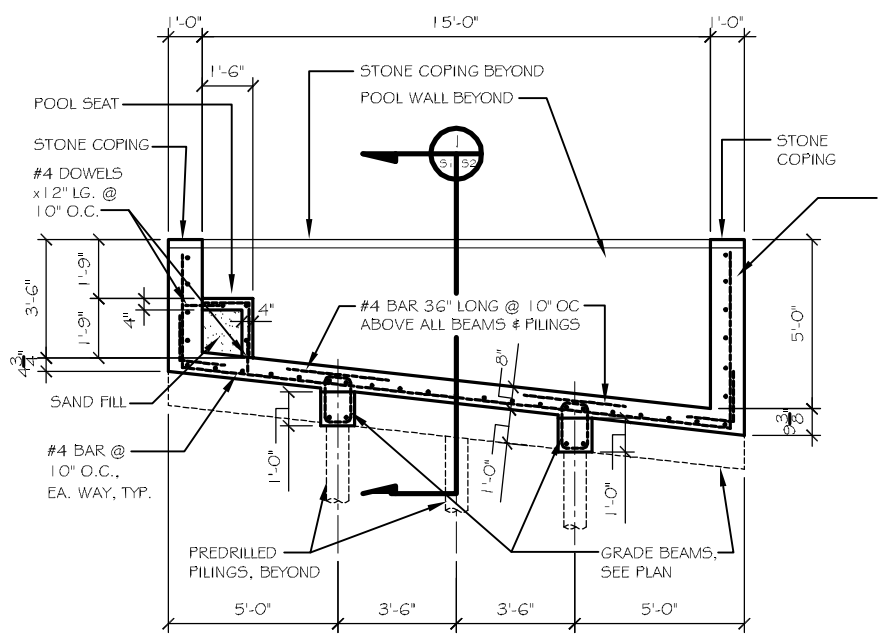

NOTE: SEE DETAILS ON SHEET S1 FOR REBAR SIZES & SPACING NOT SHOWN

POOL CROSS-SECTION 2 (S1 S2)

SCALE: 3/8"=1'

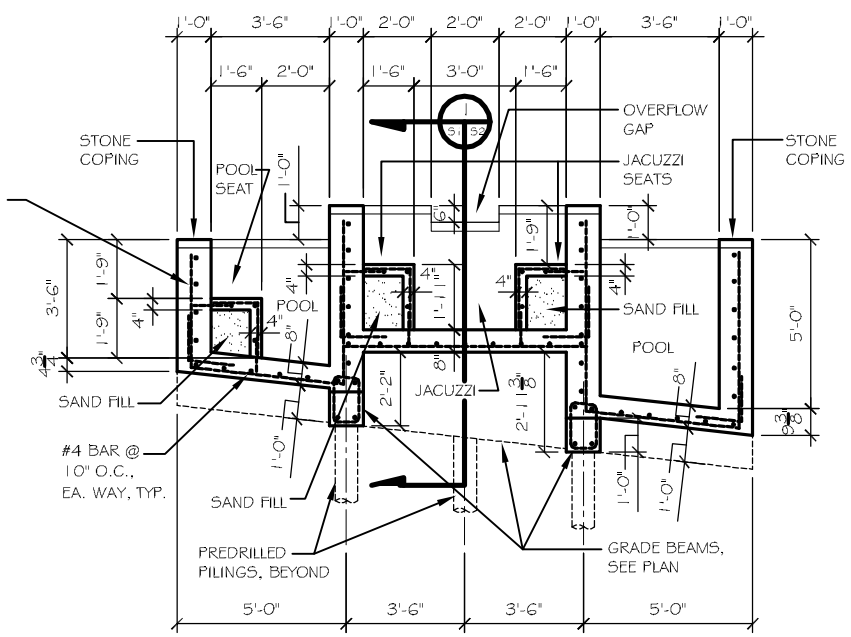

POOL/JACUZZI CROSS-SECTION 3 (S1 S2)

SCALE: 3/8"=1'

DAMMON ENGINEERING, INC.

CHIEF ENGINEER
EMMETT
DAMMON, P.E.

CHIEF ARCHITECT
ROBERT
WILTSE

554 OLD SPANISH TRAIL
SLIDELL, LA. 70458
OFFICE: 985-649-5832
FAX: 985-641-5950

WEBSITE:
WWW.DAMMONENGINEERING.COM

EMAIL:
DAMMONENG@BELLSOUTH.NET

ARCHITECTURE

ENGINEERING

STUDIES

PLANNING

INVESTIGATION

EXPERT WITNESS

LORIA
RESIDENCE
NEW ORLEANS,
LOUISIANA

POOL
SECTIONS

REV:

SCALE: AS NOTED

JOB#:

DATE: 06-14-11

SHEET 2

S-2

OF 2