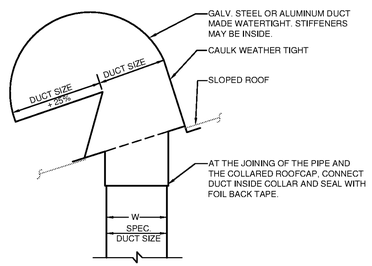

NOTES:

1. PRIME COAT AND PAINT TO MATCH ROOF COLOR.
2. PROVIDE FLASHING AND COUNTER FLASHING.
3. PROVIDE BIRD SCREEN AND OMIT BACKDRAFT DAMPER FOR BATH EXHAUST USE.

1 TYPICAL EXHAUST ROOF CAP DETAIL

NO SCALE

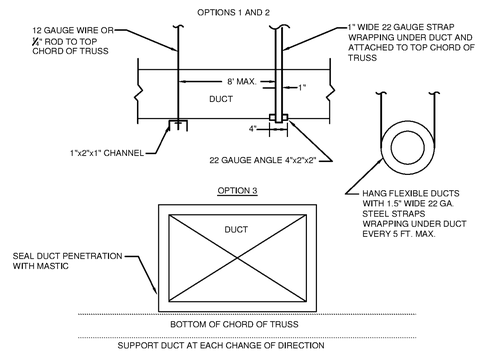

DUCTWORK SHALL BE SUPPORTED FROM STRUCTURE IN A PROPER MANNER. DUCTWORK SHALL NOT REST ON JOIST OR TRUSS SYSTEM.

2 TYPICAL DUCT SUPPORT DETAIL

NO SCALE

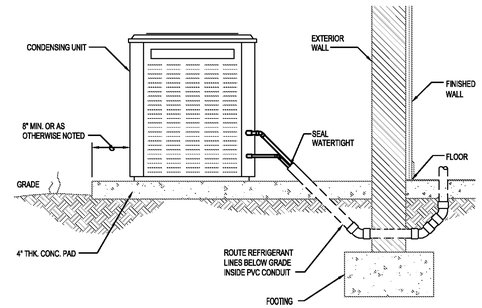

3 CONDENSING UNIT DETAIL

NO SCALE

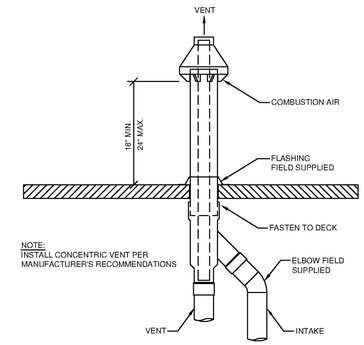

NOTE:
INSTALL CONCENTRIC VENT PER MANUFACTURER'S RECOMMENDATIONS

4 FURNACE CONCENTRIC VENT DETAIL

NO SCALE

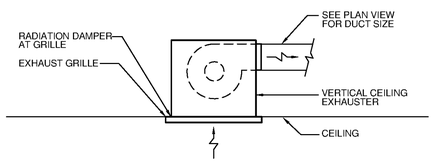

5 INLINE EXHAUST FAN DETAIL

NO SCALE

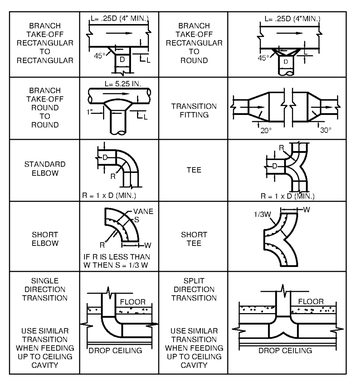

6 TYPICAL DUCT TAKE-OFFS

NO SCALE

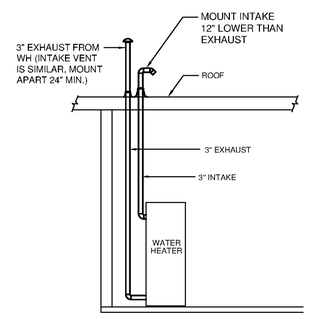

NOTES:

1. SEE ARCHITECTURAL DRAWING FOR EXACT LOCATION AND PENETRATIONS THRU ROOF
2. INSTALL COMBUSTION AIR INTAKE AND GAS VENT PER MANUFACTURER'S RECOMMENDATIONS

7 INTAKE AND EXHAUST VENTS

NO SCALE

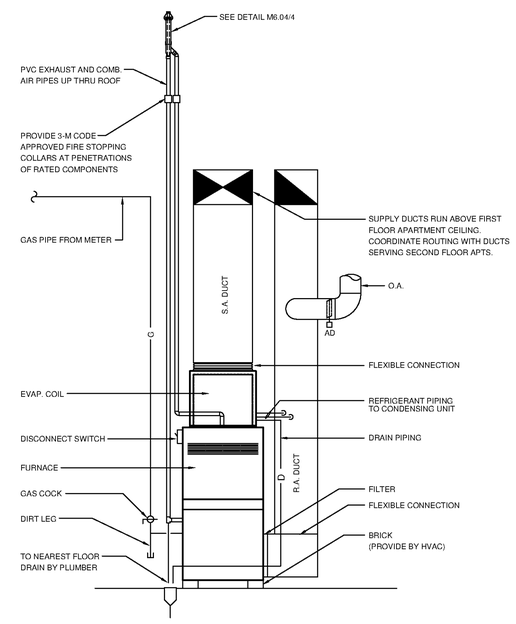

8 FURNACE ELEVATION DETAIL - CLUBHOUSE

NO SCALE

PHILLIPS

Phone 770.394.1616 Fax 770.394.1314

CONSULTANT

PHILLIPS
NORTH TERRACES
400 PERIMETER CENTER TERRACE
SUITE 650
ATLANTA, GA 30346

SEAL

ISSUE & REVISION RECORD

#	DATE	DESCRIPTION
	07/07/14	BID SET

This document is © Phillips Partnership, PC and is considered an instrument of Service and is solely for use with respect to the project as indicated below. All rights reserved. This document may not be reproduced without the prior written consent of Phillips Partnership, PC.

PROJECT

SPRINGS AT FREMAUX TOWN CENTER
SLIDELL, LA

CLIENT

CONTINENTAL PROPERTIES
CONTINENTAL 294 FUND LLC
W134 N8675 EXECUTIVE PARKWAY
MENOMONEE FALLS, WI 53051
262.502.5500 • FAX 262.502.5522

PHILLIPS JOB NUMBER 1333104

ISSUE DATE 07/07/14

DRAWN BY/CHECKED BY PEM

DRAWING TITLE

MECHANICAL DETAILS - CLUBHOUSE

SHEET NUMBER

M6.04

NORTH TERRACES
400 PERIMETER CENTER TERRACE
SUITE 650
ATLANTA, GEORGIA 30346