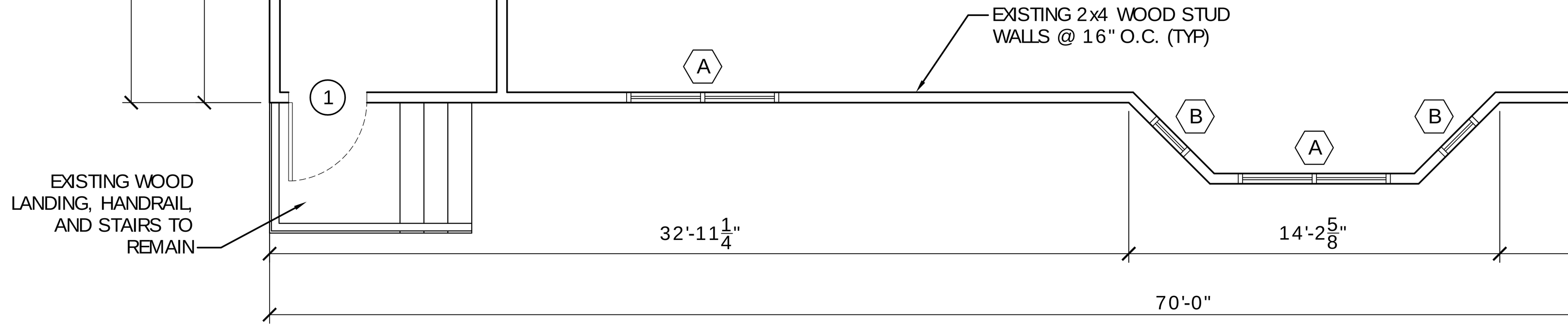

EXISTING FLOOR PLAN

SCALE: 1/4" = 1'-0"

EXISTING DOOR & HARDWARE SCHEDULE (X)

		TYPE					FRAME				HINGE					LOCK					ACCESSORIES							REMARKS
		SOLID WOOD	HOLLOW METAL	ROLL-UP	STOREFRONT	CASED OPENING	STEEL	ALUMINUM	WOOD	CASED OPENING	DBL SWING	BUTT 1-1/2 PR	BURGLERPRF	FIXED	PASSAGE	PRIVACY	DEADBOLT	KEYED HANDLE	PUSH PULL	TRANSOM	THRESHOLD	WEATHERSTRIP	DOOR STOP	ALARM	SILENCER	CLOSER		
DOOR - EXTERIOR																												
1	3/0 x 6/8		●				●					●					●				●	●	●	●				EXISTING DR. TO REMAIN
2	3/0 x 6/8	●							●			●					●	●		●	●	●	●	●	●	●		EXISTING DR. TO REMAIN
DOOR - INTERIOR																												
3	9/10 x 7/6					●																						EXISTING OPENING, MODIFY PER SHEET A-2
4	3/0 x 7/6					●																						EXISTING OPENING, MODIFY PER SHEET A-2
5	3/0x6/8	●							●			●			●								●					EXISTING DOOR
6	3/0x6/8	●							●			●				●							●					EXISTING DOOR

EXISTING WINDOW SCHEDULE (X)

		TYPE				FRAME			GLASS				LITES					ACCESSORIES							REMARKS
	WINDOW	FIXED	S. HUNG	D. HUNG	HORIZ SLIDE	STEEL	ALUMINUM	WOOD		TINTED	PLAIN	TEMPERED	WIREGLASS		NONE	2/2	2/4	6/6	8/8		ALARM	SCREEN	SHUTTER	NONE			
A	5/10 x 5/10		●				●				●				●							●	●				EXISTING TO REMAIN
B	5/10 x 1/10		●				●				●				●							●	●				EXISTING TO REMIAN