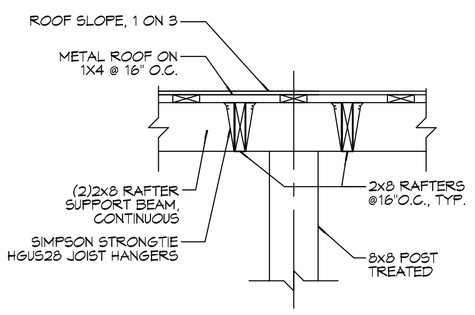

7 PATIO ROOF DETAIL
SCALE: 3/4"=1'-0"

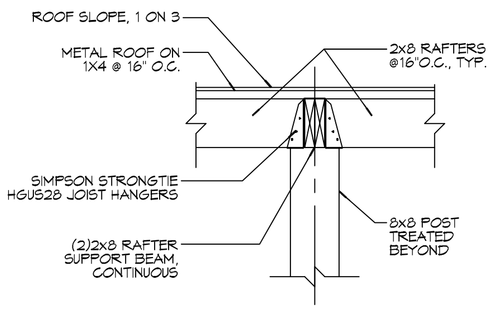

8 PATIO ROOF DETAIL
SCALE: 3/4"=1'-0"

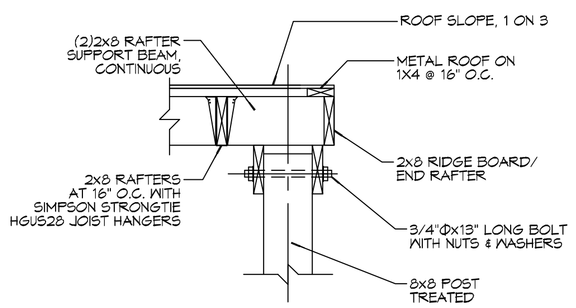

9 PATIO ROOF DETAIL
SCALE: 3/4"=1'-0"

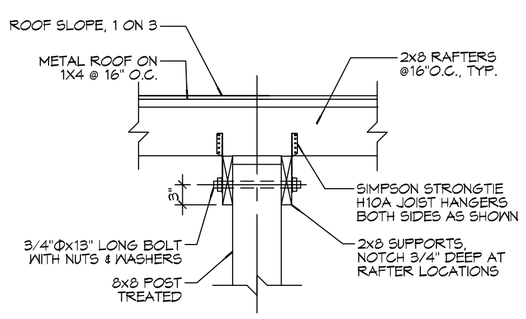

10 PATIO ROOF DETAIL
SCALE: 3/4"=1'-0"

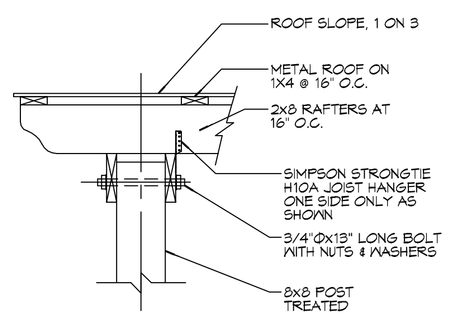

11 PATIO ROOF DETAIL
SCALE: 3/4"=1'-0"

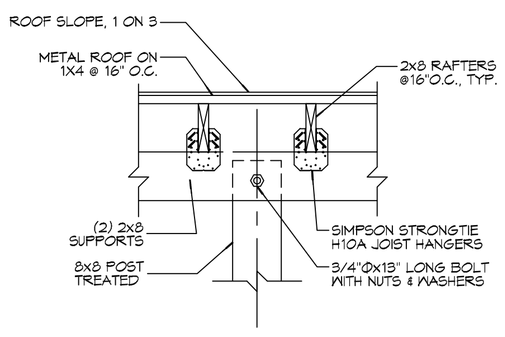

12 PATIO ROOF DETAIL
SCALE: 3/4"=1'-0"

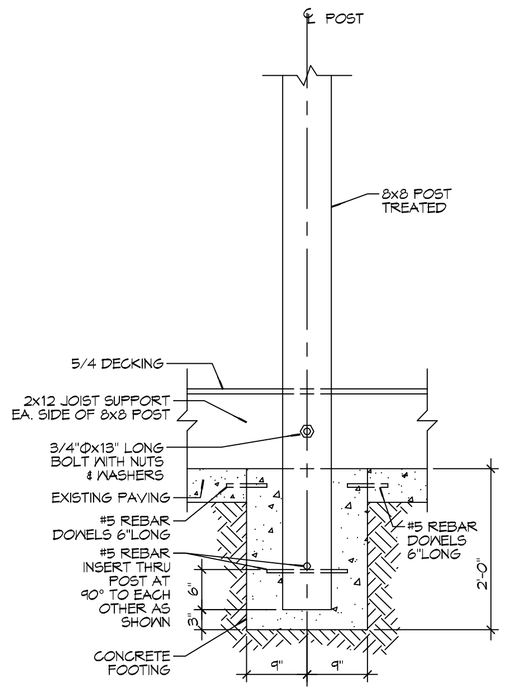

6 PATIO WALL SECT. @ POST
SCALE: 3/4"=1'-0"

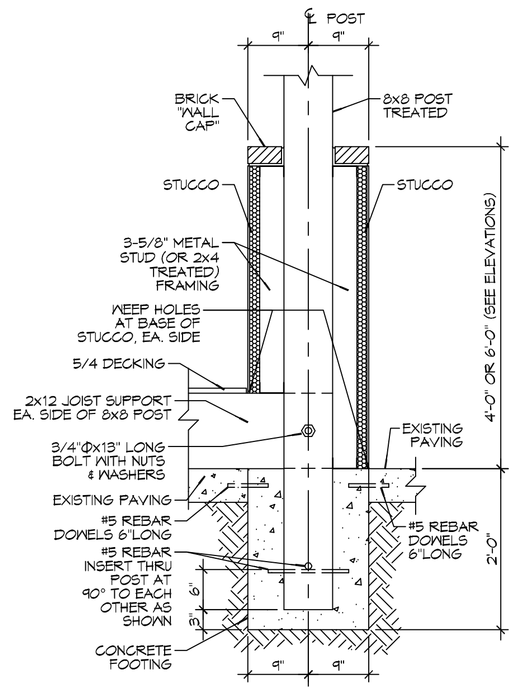

5 PATIO WALL SECT. @ POST
SCALE: 3/4"=1'-0"

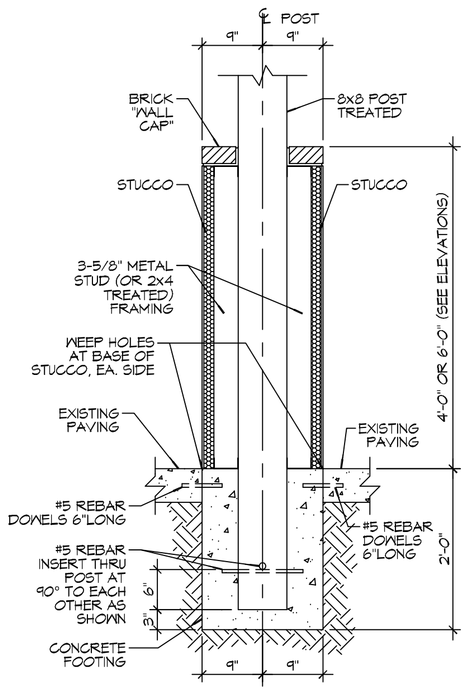

4 PATIO WALL SECT. @ POST
SCALE: 3/4"=1'-0"

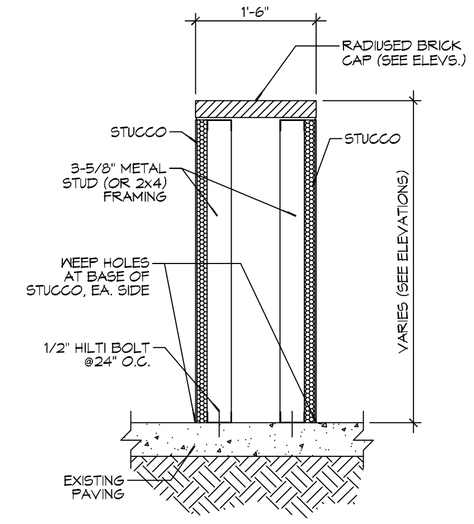

3 PATIO WALL SECTION
SCALE: 3/4"=1'-0"

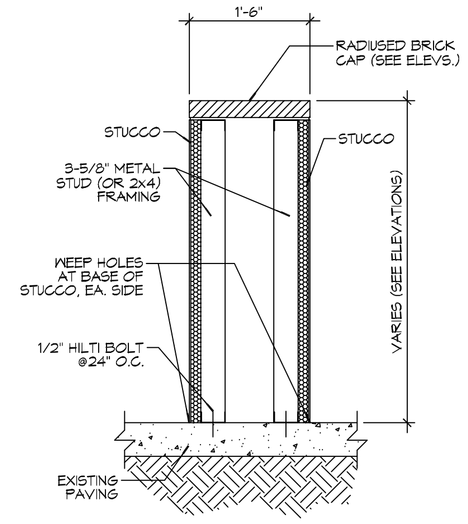

3 PATIO WALL SECTION
SCALE: 3/4"=1'-0"

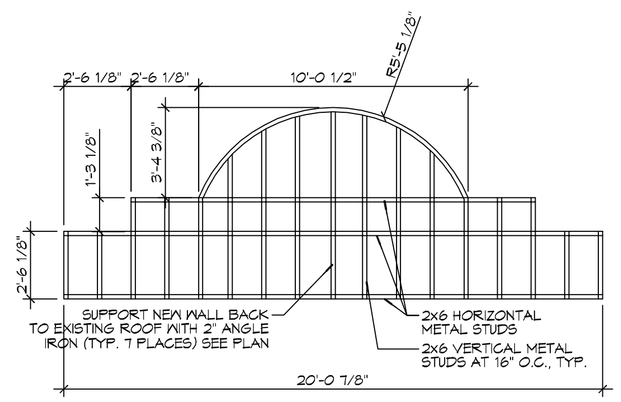

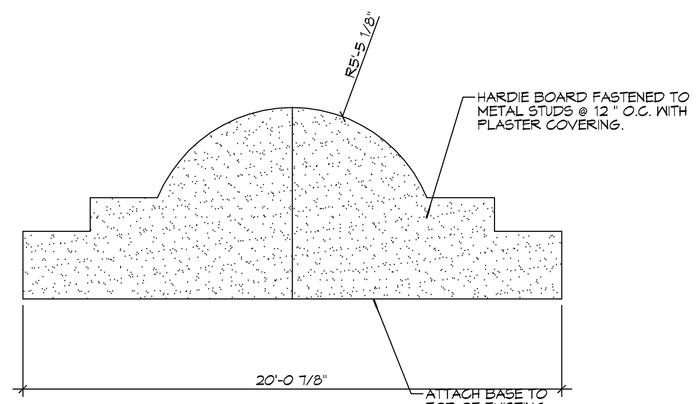

3 REAR PARAPET ELEVATIONS
SCALE: 1/4"=1'-0"

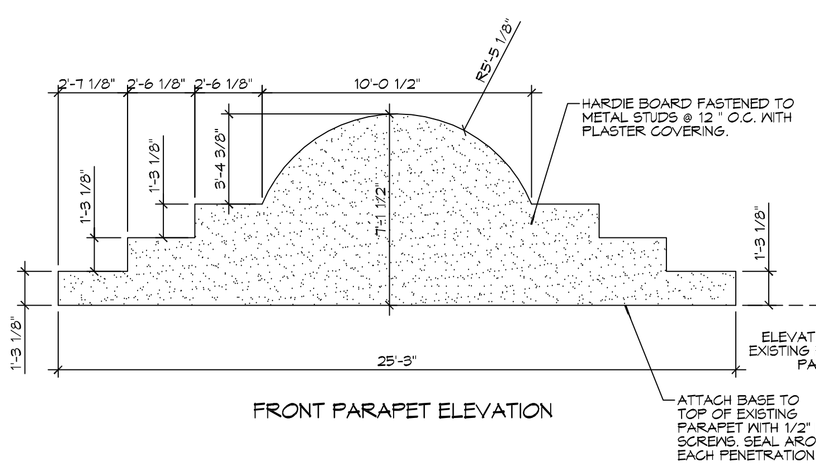

FRONT PARAPET ELEVATION

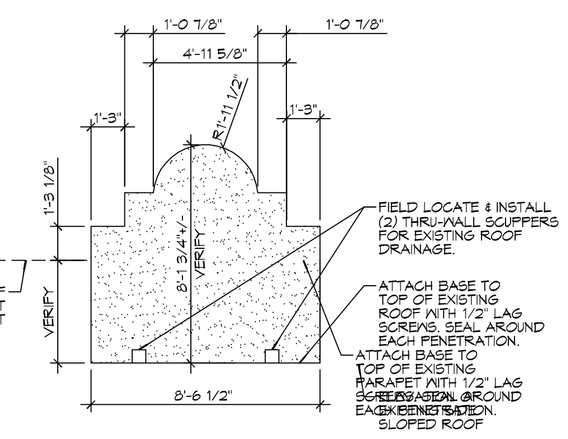

SIDE PARAPET ELEVATION

3 FRONT PORCH PARAPET ELEVATIONS
SCALE: 1/4"=1'-0"

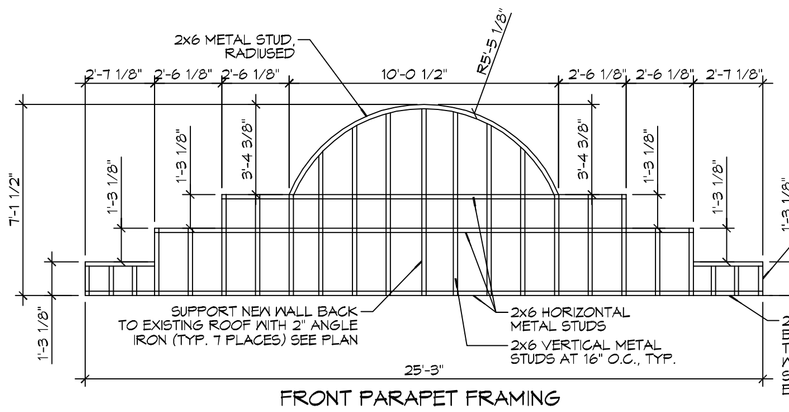

FRONT PARAPET FRAMING

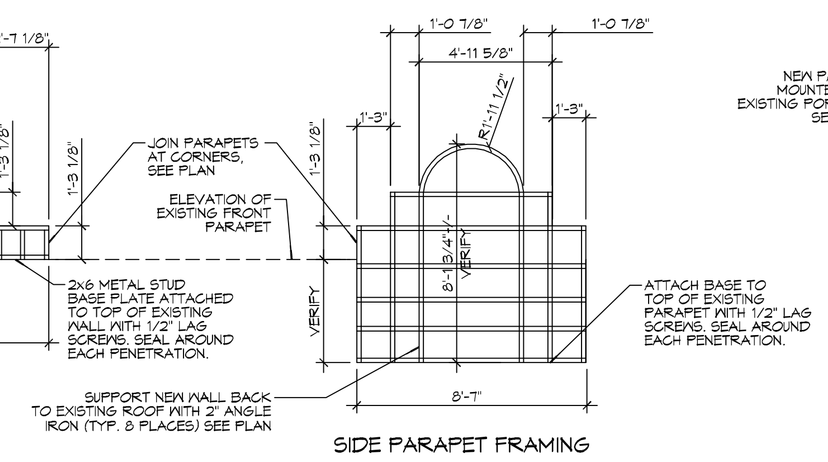

SIDE PARAPET FRAMING

2 FRONT PORCH PARAPET FRAMING
SCALE: 1/4"=1'-0"

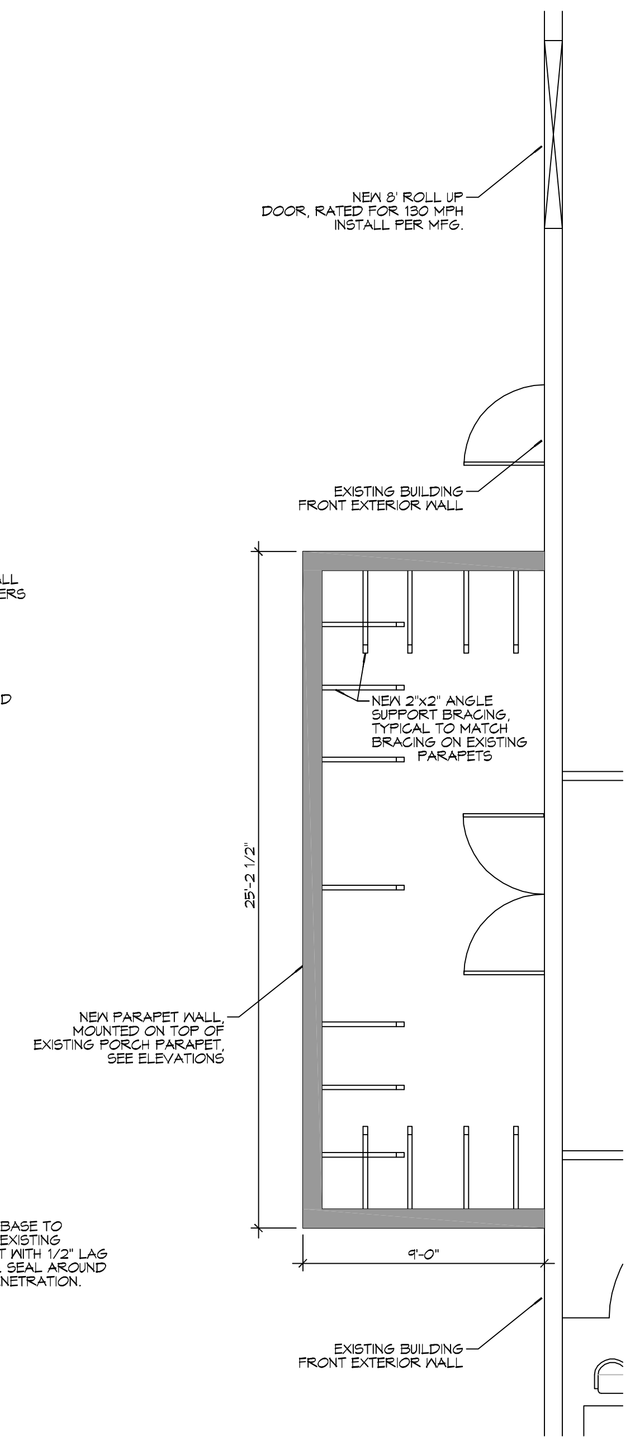

1 FRONT PORCH PARAPET PLAN
SCALE: 1/4"=1'-0"

DESIGN CRITERIA:

THE CONSTRUCTION FOR SAID RESIDENCE, WHERE BASIC WIND SPEED IS 130 MILES PER HOUR, IS DESIGNED IN ACCORDANCE WITH:
AMERICAN FOREST AND PAPER ASSOCIATION (AF&PA) WOOD FRAME CONSTRUCTION MANUAL FOR ONE AND TWO FAMILY DWELLINGS (WFCM) 2001 EDITION
AS WELL AS THE INTERNATIONAL RESIDENTIAL CODE (IRC) 2012 EDITION CHAPTER 4, ALL NEW WORK SHALL BE HURRICANE STRAPPED.

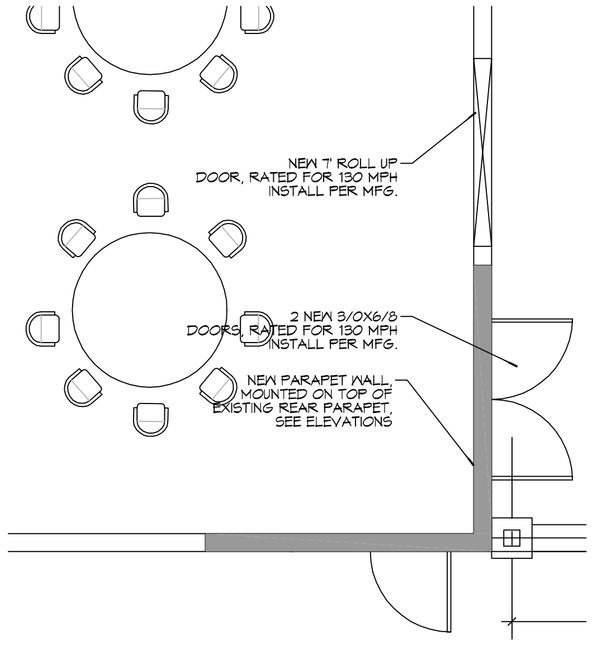

13 REAR PARAPET PLAN
SCALE: 1/4"=1'-0"

DAMMON ENGINEERING, INC.
LOUISIANA & MISSISSIPPI
www.dammonengineering.com
Info@dammonengineering.com
PH: 985.649.5832 F: 985.641.5950
Chief Engineer: Brian Mistich, PE
554 Old Spanish Trail
Slidell, LA 70458

#	DESCRIPTION	DATE

REVISIONS

SEAL:

EL PASO MEXICAN RESTAURANT
601 VETERANS BLVD
METAIRIE AVE, LOUISIANA

JOB No:	2266
DATE:	12-03-15
DRAWN BY:	CKD/JTL
CHECKED BY:	BAM

This document is the property of Dammon Engineering. Reproduction or use of this document without written consent is prohibited. Any and all concepts or ideas described or represented in this document are the property of Dammon Engineering, and may not be used without written consent of Dammon Engineering. Dammon Engineering assumes no responsibility for the accuracy of the information contained in electronic media, which may be altered by parties other than Dammon Engineering.

SHEET TITLE:
COVERED FRONT PORCH NEW PARAPET DETAILS & REAR PATIO DECK & TRELLIS DETAILS

DRAWING NUMBER:
A103

SHEET No: 4 of #4

FILE NAME: J:\- Closed Jobs\- Restaurants\2266 - El Paso 601 Metairie\Drawings\Current Drawings\A103-Front Porch Parapet & Rear Patio Deck Details.dwg PLOT DATE & TIME: Thursday, October 12, 2017 1:04:01 PM