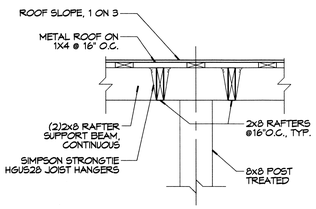

7 PATIO ROOF DETAIL
SCALE: 3/4"=1'-0"

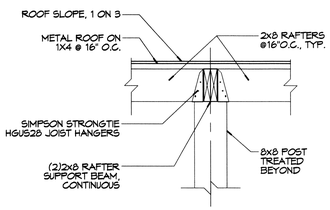

8 PATIO ROOF DETAIL
SCALE: 3/4"=1'-0"

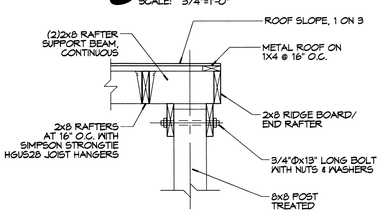

9 PATIO ROOF DETAIL
SCALE: 3/4"=1'-0"

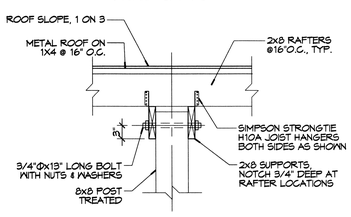

10 PATIO ROOF DETAIL
SCALE: 3/4"=1'-0"

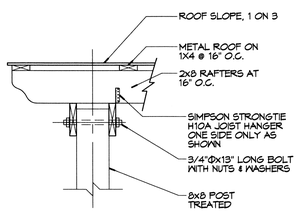

11 PATIO ROOF DETAIL
SCALE: 3/4"=1'-0"

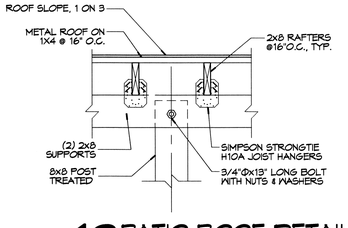

12 PATIO ROOF DETAIL
SCALE: 3/4"=1'-0"

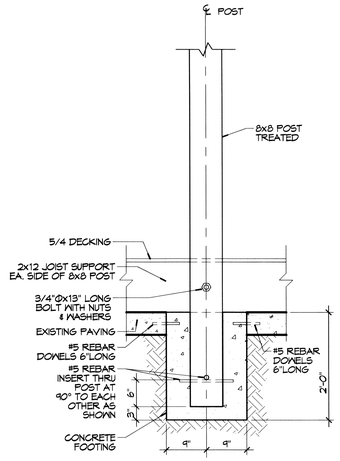

6 PATIO WALL SECT. @ POST
SCALE: 3/4"=1'-0"

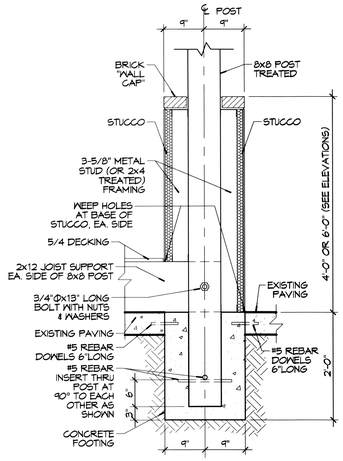

5 PATIO WALL SECT. @ POST
SCALE: 3/4"=1'-0"

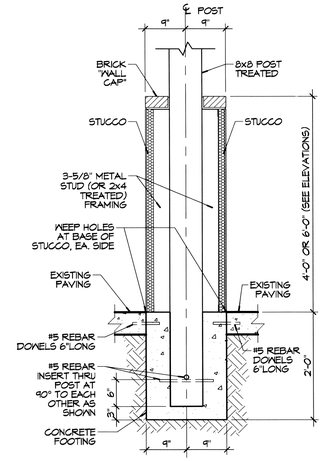

4 PATIO WALL SECT. @ POST
SCALE: 3/4"=1'-0"

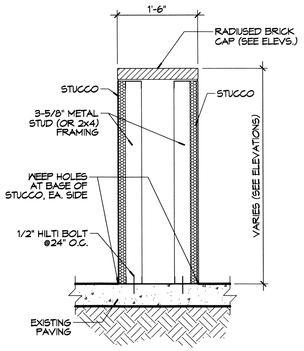

3 PATIO WALL SECTION
SCALE: 3/4"=1'-0"

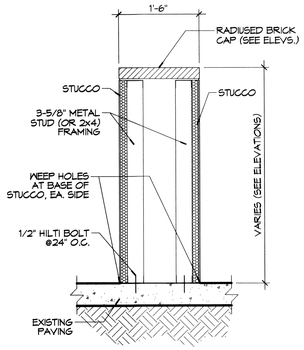

3 PATIO WALL SECTION
SCALE: 3/4"=1'-0"

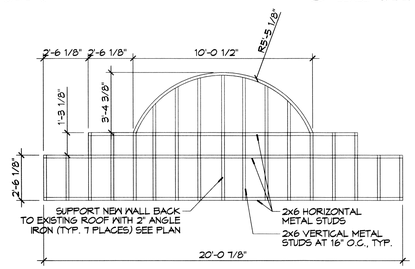

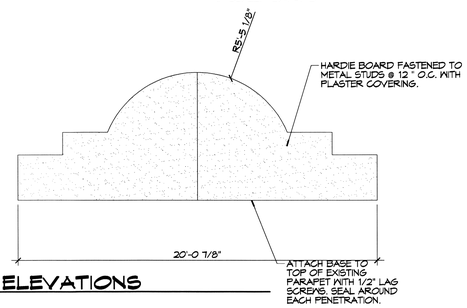

3 REAR PARAPET ELEVATIONS
SCALE: 1/4"=1'-0"

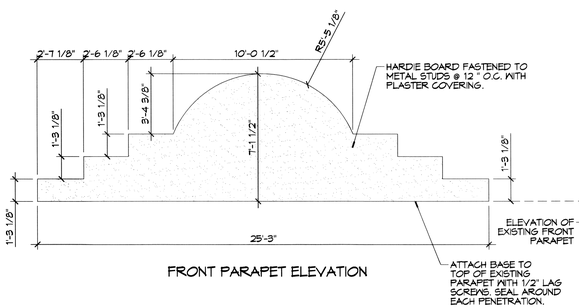

FRONT PARAPET ELEVATION

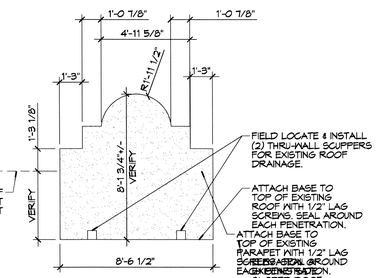

SIDE PARAPET ELEVATION

3 FRONT PORCH PARAPET ELEVATIONS
SCALE: 1/4"=1'-0"

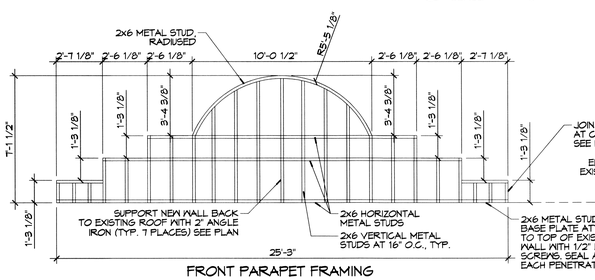

FRONT PARAPET FRAMING

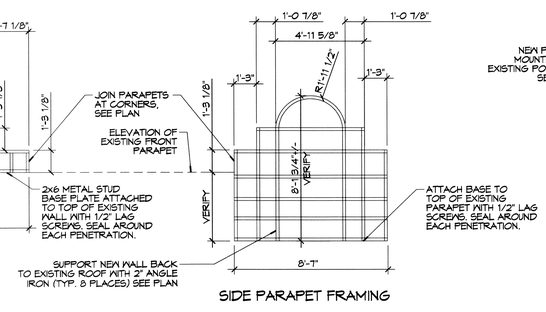

SIDE PARAPET FRAMING

2 FRONT PORCH PARAPET FRAMING
SCALE: 1/4"=1'-0"

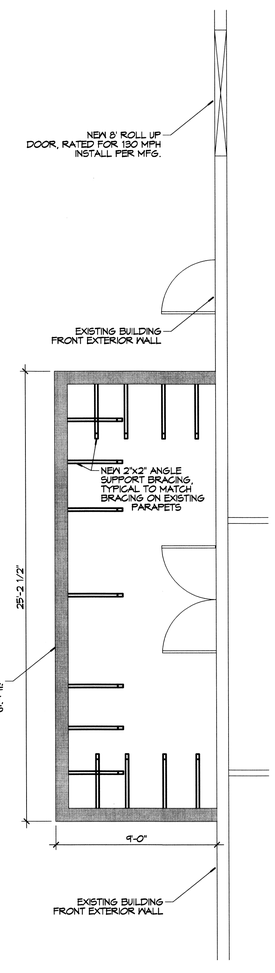

1 FRONT PORCH PARAPET PLAN
SCALE: 1/4"=1'-0"

DESIGN CRITERIA:

THE CONSTRUCTION FOR SAID RESIDENCE, WHERE BASIC WIND SPEED IS 130 MILES PER HOUR, IS DESIGNED IN ACCORDANCE WITH:
AMERICAN FOREST AND PAPER ASSOCIATION (AF&PA) WOOD FRAME CONSTRUCTION MANUAL FOR ONE AND TWO FAMILY DWELLINGS (WFCM) 2001 EDITION
AS WELL AS THE INTERNATIONAL RESIDENTIAL CODE (IRC) 2012 EDITION CHAPTER 4, ALL NEW WORK SHALL BE HURRICANE STRAPPED.

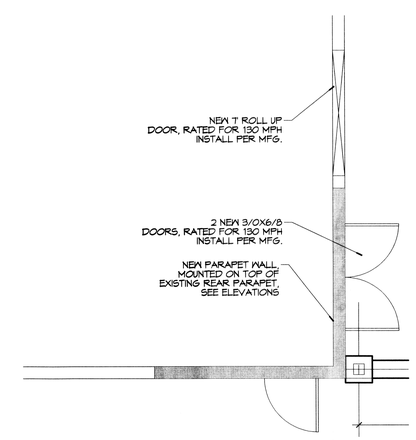

13 REAR PARAPET PLAN
SCALE: 1/4"=1'-0"

DAMMON ENGINEERING, INC.
LOUISIANA & MISSISSIPPI
www.dammonengineering.com
info@dammonengineering.com
PH: 985.549.3832 F: 985.641.5950
Chief Engineer: Brian Mistich, PE
554 Old Spanish Trail
Slidell, LA 70458

#	DESCRIPTION	DATE

REVISIONS

SEAL:

STATE OF LOUISIANA
BRIAN A. MISTICH
License No. 30187
PROFESSIONAL ENGINEER
12/8/2015

EL PASO MEXICAN RESTAURANT
601 VETERANS BLVD.
METAIRIE AVE., LOUISIANA

JOB No:	2266	DATE:	12-08-15
DRAWN BY:	CAD/JTL	CHECKED BY:	BAM

The plans shown on this sheet are, when and as if approved, intended only for a specific purpose and client. They are not to be used at any other time for any other purpose or by others. Ownership of these plans is vested in Dammon Engineering, Inc. and may not be used without written consent of Dammon Engineering, Inc. Copyright 2015 Dammon Engineering, Inc. All rights reserved.

SHEET TITLE:
COVERED FRONT PORCH NEW PARAPET DETAILS & REAR PATIO DECK & TRELLIS DETAILS

DRAWING NUMBER:
A103

SHEET No: 4 of #4