1 MOUNTING HEIGHTS

SCALE: 1/4" = 1'-0"

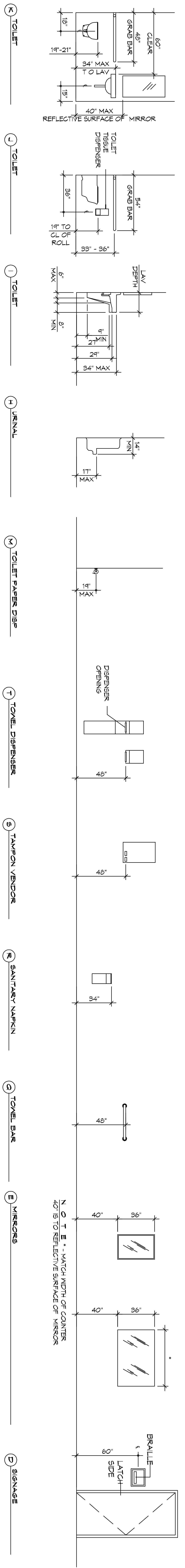
K TOILET
18"
19"-21"
34" MAX TO LAV
48" GRAB BAR
60" CLEAR
15"
40" MAX
REFLECTIVE SURFACE OF MIRROR
L TOILET
TOILET TISSUE DISPENSER
36"
54" GRAB BAR
19" TO CL OF ROLL
33" - 36"
I TOILET
6" MAX
LAV DEPTH
8" MIN
9" MIN
27"
29"
34" MAX
H URINAL
14" MIN
17" MAX
M TOILET PAPER DISP
19" MAX
T TOWEL DISPENSER
DISPENSER OPENING
48"
S TAMPON VENDOR
48"
R SANITARY NAPKIN
34"
Q TOWEL BAR
48"
E MIRRORS
40"
36"
40"
36"
*
D SIGNAGE
60"
BRAILLE
LATCH SIDE

NOTE * - MATCH WIDTH OF COUNTER
40" IS TO REFLECTIVE SURFACE OF MIRROR

2 RESTROOM CLEARANCES

SCALE: 1/4" = 1'-0"

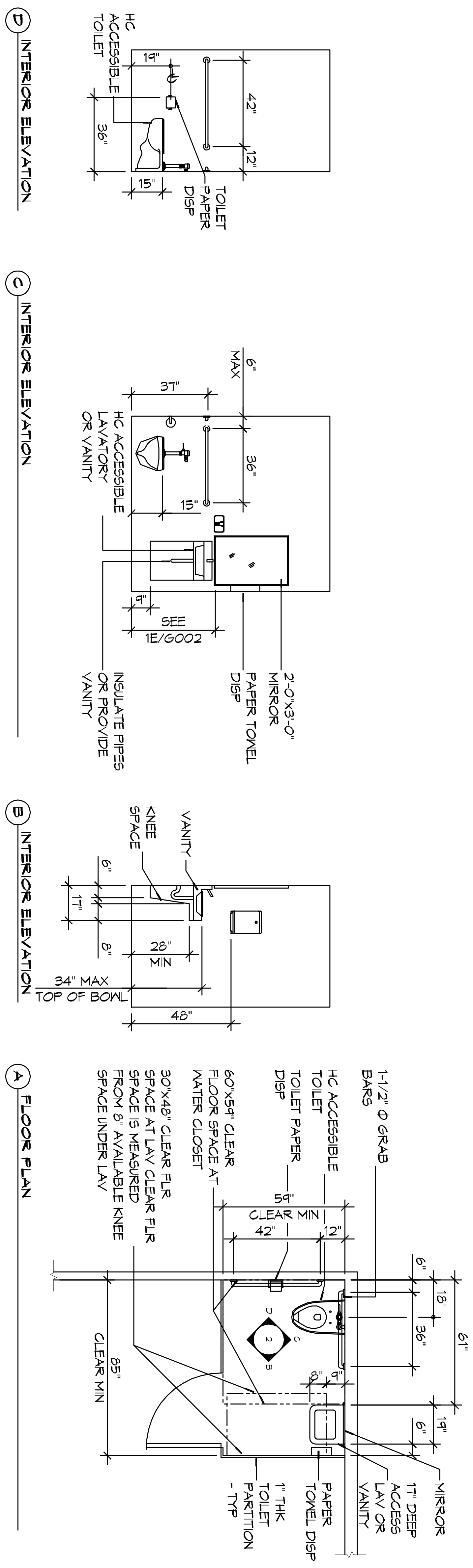
D INTERIOR ELEVATION
HC ACCESSIBLE TOILET
19"
42"
36"
12"
15"
TOILET PAPER DISP
C INTERIOR ELEVATION
37"
6" MAX
HC ACCESSIBLE LAVATORY OR VANITY
36"
15"
9"
SEE 1E/G002
2'-0"x3'-0" MIRROR
PAPER TOWEL DISP
INSULATE PIPES OR PROVIDE VANITY
B INTERIOR ELEVATION
VANITY
KNEE SPACE
6"
17"
8"
28" MIN
34" MAX TOP OF BOWL
48"
A FLOOR PLAN
1-1/2" Φ GRAB BARS
HC ACCESSIBLE TOILET
TOILET PAPER DISP
60"x59" CLEAR FLOOR SPACE AT WATER CLOSET
30"x48" CLEAR FLR SPACE AT LAV CLEAR FLR SPACE IS MEASURED FROM 8" AVAILABLE KNEE SPACE UNDER LAV
59" CLEAR MIN
42"
12"
6"
18"
36"
61"
8"
9"
19"
6"
85" CLEAR MIN
D
C
B
2
MIRROR
17" DEEP ACCESS LAV OR VANITY
PAPER TOWEL DISP
1" THK TOILET PARTITION - TYP

1 MENS RESTROOM

SCALE: 1/2" = 1'-0"

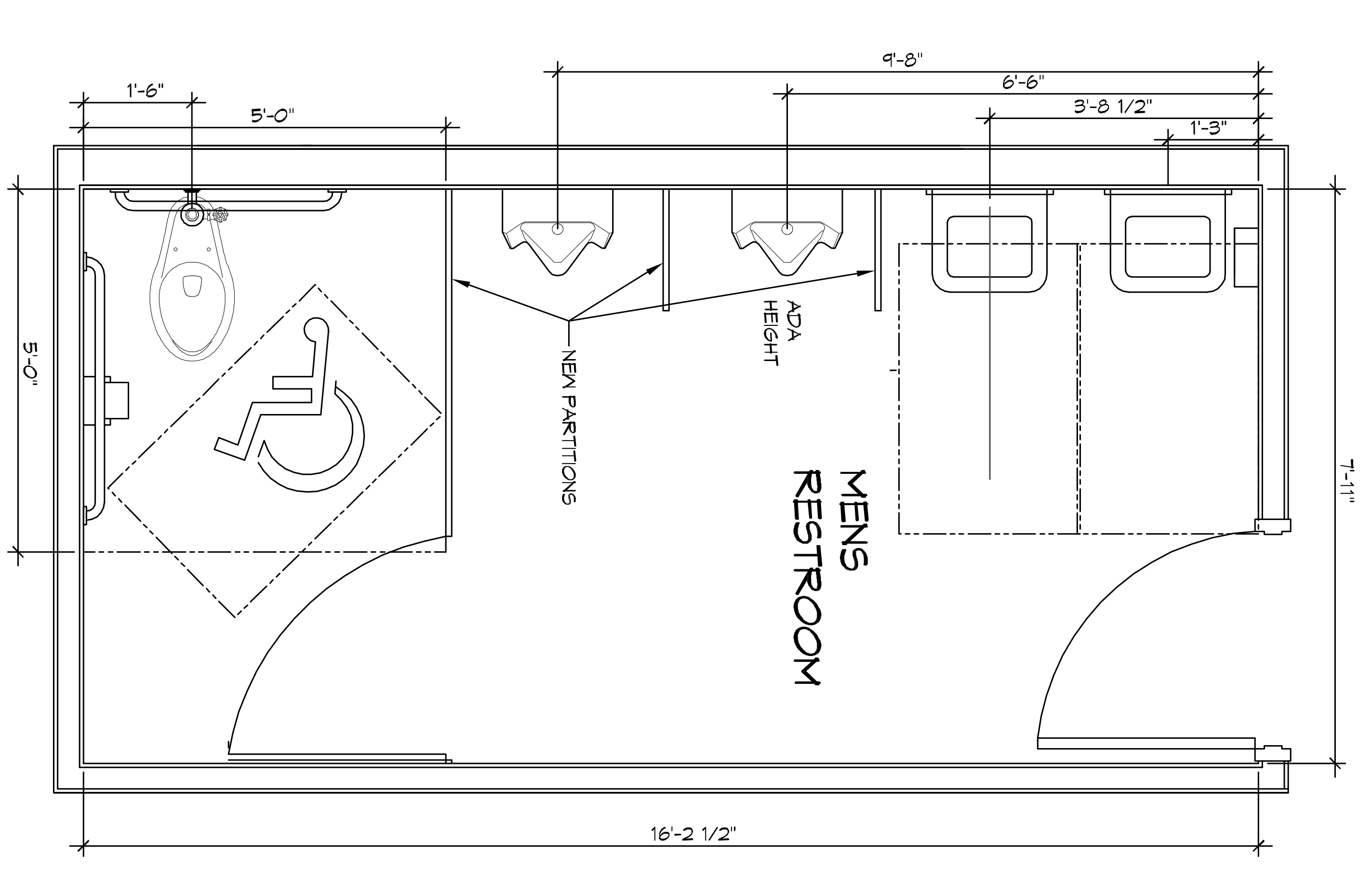
1'-6"
5'-0"
9'-8"
6'-6"
3'-8 1/2"
1'-3"
5'-0"
7'-11"
NEW PARTITIONS
ADA HEIGHT
MENS RESTROOM
16'-2 1/2"

2 WOMENS RESTROOM

SCALE: 1/2" = 1'-0"

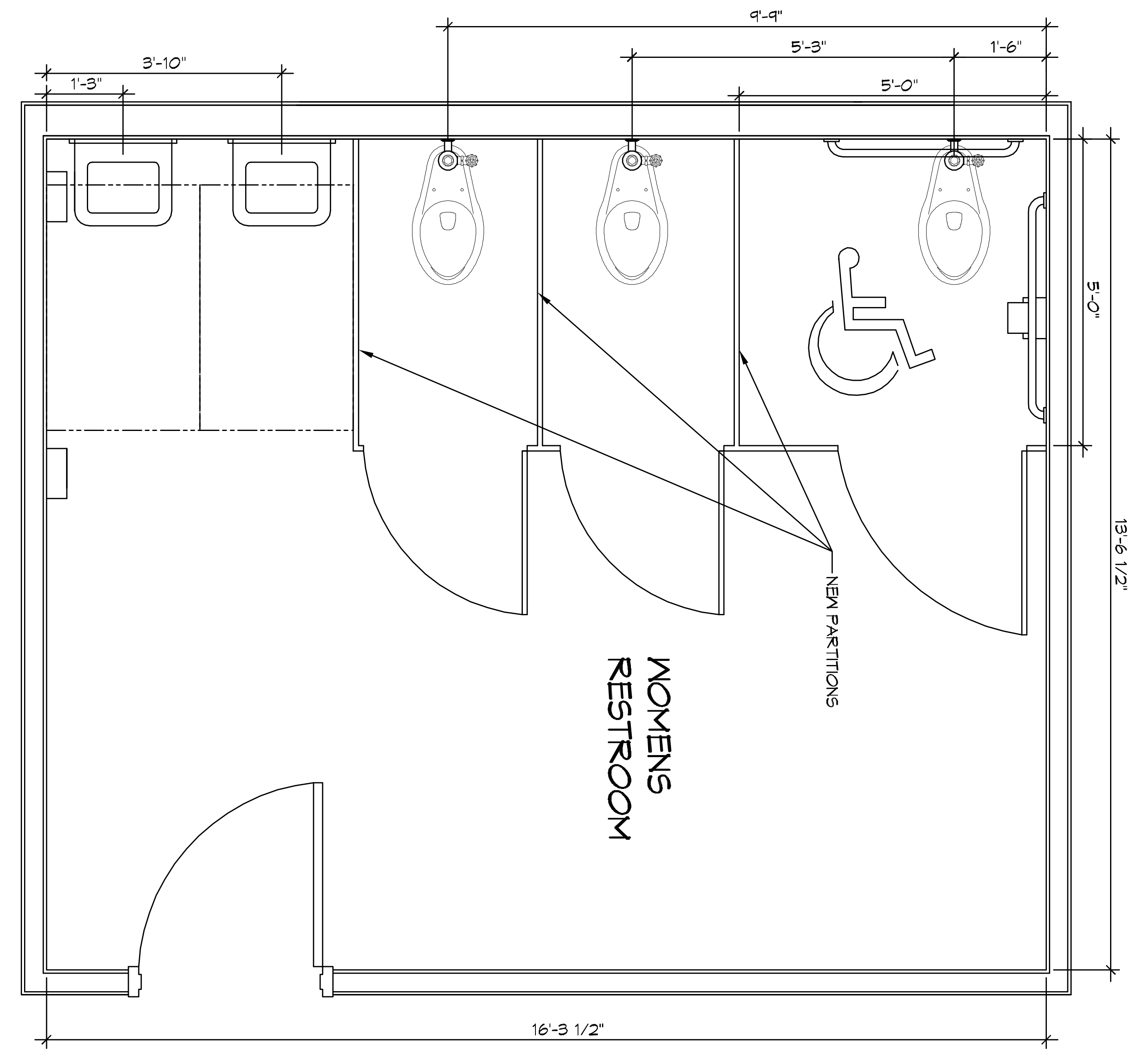
9'-9"
3'-10"
1'-3"
5'-3"
1'-6"
5'-0"
5'-0"
13'-6 1/2"
NEW PARTITIONS
WOMENS RESTROOM
16'-3 1/2"

TOILETS:
KOHLER : 96057 FOR ADA TOILET W/FLUSH VALVE
KOHLER : 96053 FOR NON ADA TOILET W/FLUSH VALVE

SINKS:
KOHLER : K-2030-0 ADA WITH LEVER HANDLE

URNIALS : K-5016-ET-0 WALL MOUNTED W/FLUSH VALVE

PLUS ALL ACCESSORIES FOR A COMPLETE INSTALLATION.

FIELD VERIFY PRIOR TO ORDERING.

2 NEW BAR LAYOUT

SCALE: 1/2" = 1'-0"

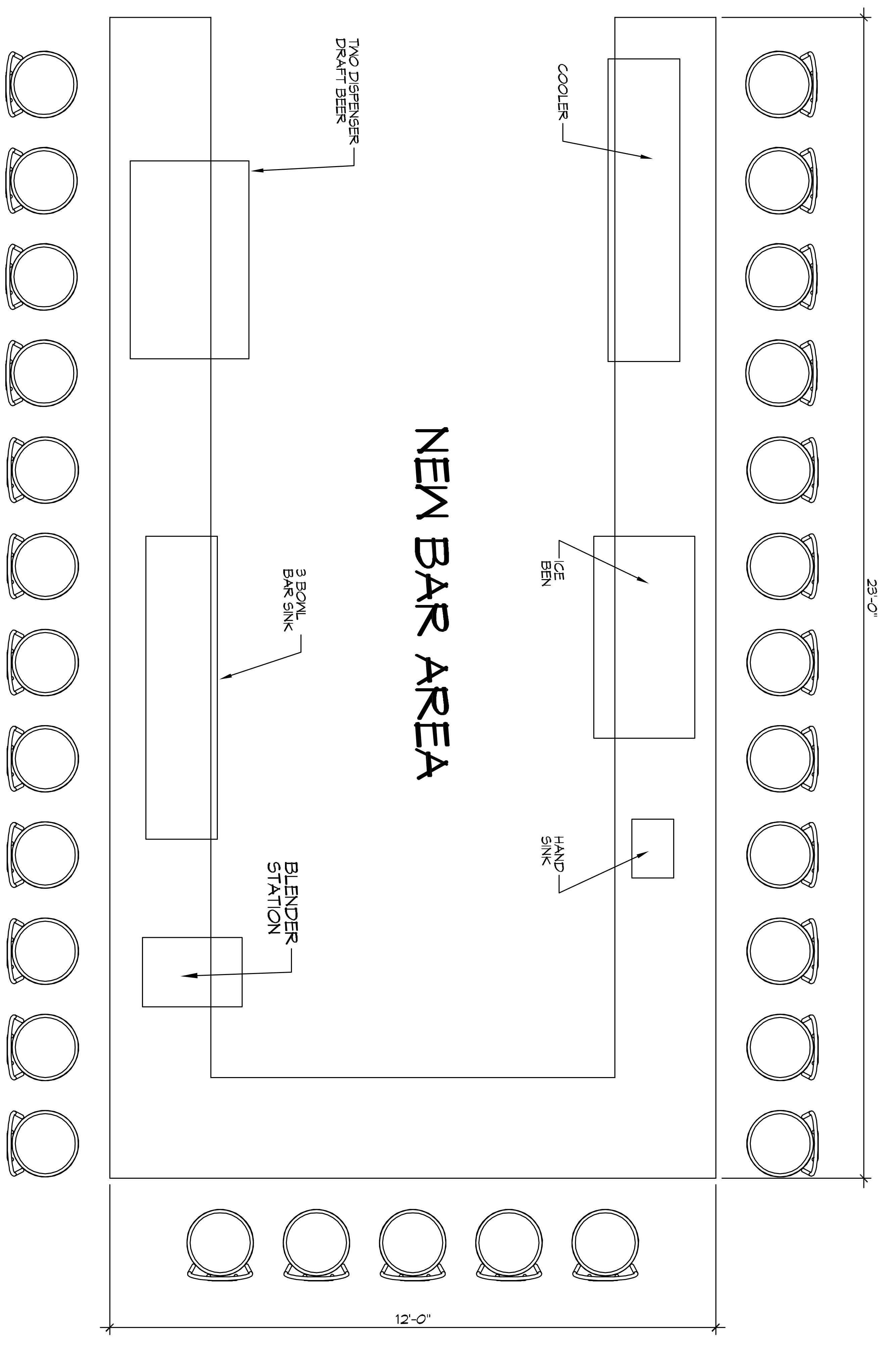
NEW BAR AREA
TWO DISPENSER DRAFT BEER
3 BOWL BAR SINK
BLENDER STATION
COOLER
ICE BEN
HAND SINK
23'-0"
12'-0"

ACCESSIBILITY NOTES

DOOR CLEARANCE NOTES

ALCOVES SHALL COMPLY WITH THE CLEARANCES FOR FRONT APPROACHES.
DOOR HARDWARE SHALL BE LEVER TYPE.
MAX DOOR OPENING FORCE:
INTERIOR HINGED DOORS: 5 LBF
EXTERIOR HINGED DOORS: 8.5 LBF
SLIDING OR FOLDING DOORS: 5 LBF

HARDWARE REQUIRED FOR ACCESSIBLE DOOR PASSAGE SHALL BE MOUNTED NO HIGHER THAN 48" AND NOT LESS THAN 34" ABOVE FINISHED FLOOR.

THE FLOOR OR GROUND AREA WITHIN THE REQUIRED CLEARANCES SHALL BE LEVEL AND CLEAR.

DOORWAYS SHALL HAVE A MINIMUM CLEAR OPENING OF 32" WITH THE DOOR OPEN 90°, MEASURED BETWEEN THE FACE OF THE DOOR AND THE OPPOSITE STOP. OPENINGS MORE THAN 24" IN DEPTH SHALL MAINTAIN 32" MIN CLEARANCE.

SHEET No: 2 of #

DRAWING NUMBER: G102

SHEET TITLE: ACCESSIBILITY INFORMATION

RENOVATION OF ADA BATHROOMS AND BAR

OSHAKA HABACHI GRILL % SUSHI BAR

792 I-10 SERVICE ROAD
SLIDELL, LA. 70461

JOB No:	[####]	DATE:	10-19-17
DRAWN BY:	CKD	CHECKED BY:	CKD

The above drawings and specifications, designs and arrangements represented thereby are and shall remain the property of Dammon Engineering, and no part thereof shall be copied, disclosed to others, or used in connection with any work or project other than the specific project for which the have been prepared and developed without written consent of Dammon Engineering. Visual contact with these drawings or specifications shall constitute conclusive evidence of acceptance of these restrictions.

SEAL:

REVISIONS

#	DESCRIPTION	DATE

DAMMON
ENGINEERING, INC.
LOUISIANA & MISSISSIPPI

Chief Engineer: Brian Mistich, PE
554 Old Spanish Trail
Slidell, LA 70458

www.dammonengineering.com
info@dammonengineering.com
PH: 985.649.5832