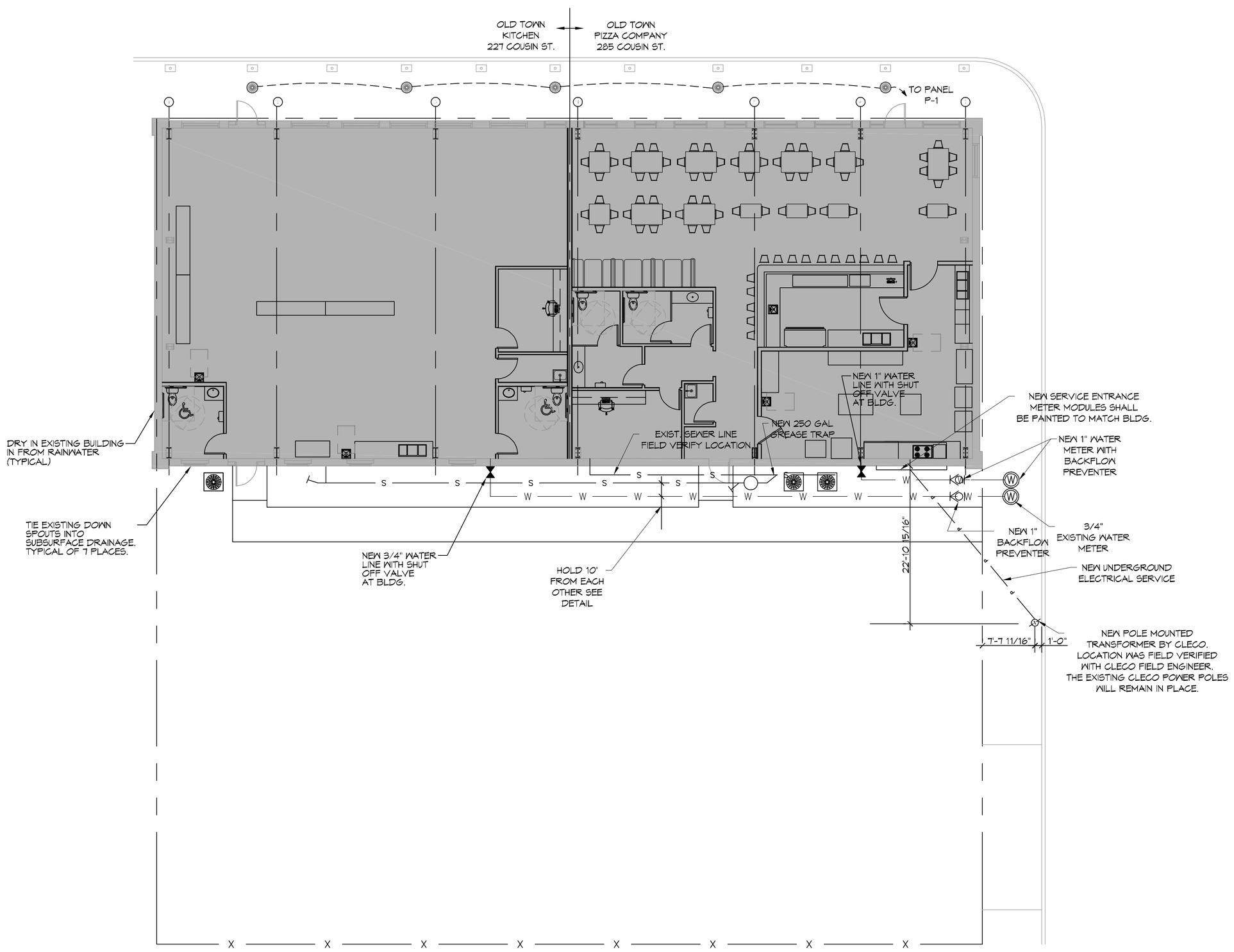

N

1 SITE UTILITY PLAN
SCALE: 1"=10'-0"

GENERAL SITE NOTES

1. PROVIDE ALL LABOR, MATERIAL AND EQUIPMENT FOR A COMPLETE OPERATING SYSTEM. CONTRACTOR IS TO FIELD VERIFY ALL EXISTING UTILITY LOCATIONS, ELEVATIONS, AND INVERTS PRIOR TO COMMENCING ANY WORK. CONTRACTOR SHALL PAY NECESSARY FEES FOR THE UTILITIES CONNECTIONS.
2. CONTRACTOR TO BE RESPONSIBLE TO VERIFY ANY INVERTS AND SET NEW INVERTS OF SEWAGE AND DRAINAGE PIPES.
3. ALL WORK AND MATERIAL TO COMPLY STRICTLY TO THE LATEST LOCAL CITY PARISH, STATE, AND NATIONAL GOVERNING CODES.
4. SEWAGE LINES 3" AND SMALLER SHALL BE SLOPED 1/4" PER FOOT AND LINES THAT ARE 4" AND LARGER SHALL BE SLOPED 1/8" PER FOOT.
10. CONTRACTOR SHALL CONTACT LOUISIANA ONE CALL PRIOR TO COMMENCEMENT OF SITE EXCAVATION.

SITE UTILITIES LEG END

- W — NEW WATER LINE
- S — NEW SEWER LINE
- P — NEW ELECTRICAL LINE

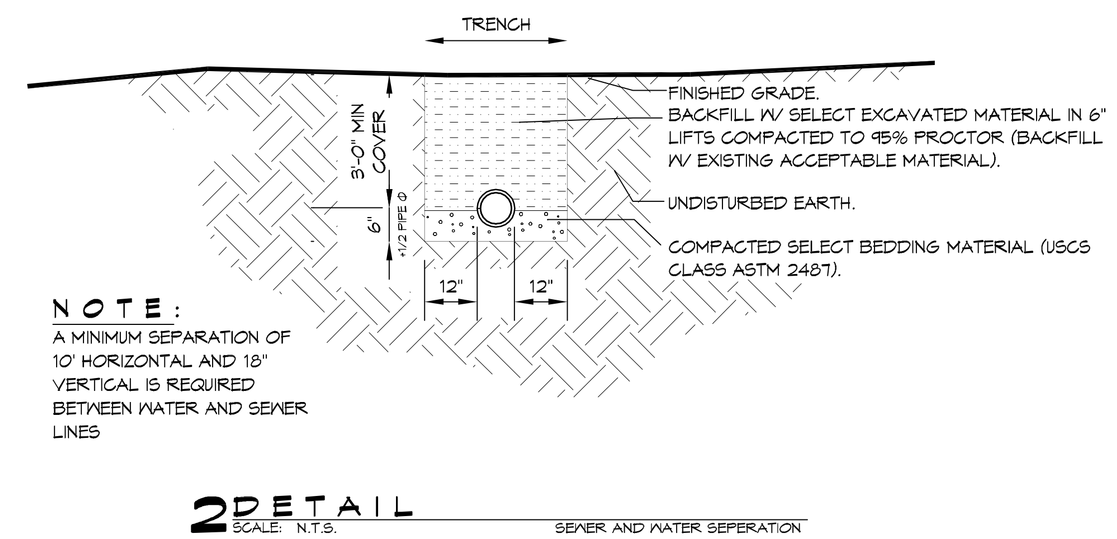

NOTE:
A MINIMUM SEPARATION OF 10' HORIZONTAL AND 18" VERTICAL IS REQUIRED BETWEEN WATER AND SEWER LINES

2 DETAIL
SCALE: N.T.S. — SEWER AND WATER SEPERATION

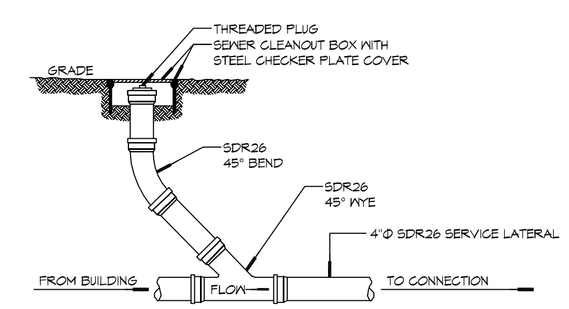

3 DETAIL
SCALE: N.T.S. — SEWER CLEAN OUT

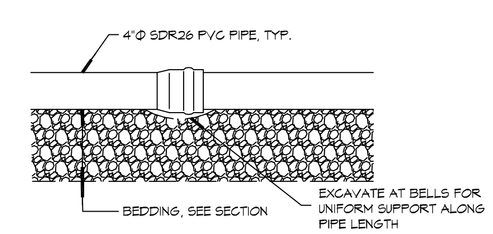

4 DETAIL
SCALE: N.T.S. — TYPICAL PIPE BEDDING

DAMMON ENGINEERING, INC.
LOUISIANA & MISSISSIPPI
www.dammonengineering.com
info@dammonengineering.com
PH: 985.649.5832
Chief Engineer: Brian Mistich, PE
554 Old Spanish Trail
Slidell, LA 70458

#	DESCRIPTION	DATE
	REVISIONS	

SEAL:
STATE OF LOUISIANA — BRIAN A. MISTICH License No. 30187 — PROFESSIONAL ENGINEER

NEW RESTAURANT
OLD TOWN PIZZA COMPANY
285 COUSIN STREET
SLIDELL, LA. 70458

JOB No:	2331	DATE:	12-21-17
DRAWN BY:	CKD	CHECKED BY:	CKD

This drawing is the sole property of Dammon Engineering, and any part thereof shall not be used, copied or reproduced without the written consent of Dammon Engineering. Any violation of this notice will be prosecuted to the full extent of the law. Dammon Engineering, Inc. shall not be liable for any changes or alterations made to this drawing by others.

SHEET TITLE:
SITE UTILITY PLAN

DRAWING NUMBER:
C102

SHEET No: 4 of # 9

FILE NAME: J:\Ac - RESTAURANT\2331 - Old Town Pizza Cousin\Drawings\Current Drawings\C102 - Site Utilities .dwg PLOT DATE & TIME: Thursday, December 21, 2017 2:28:27 PM