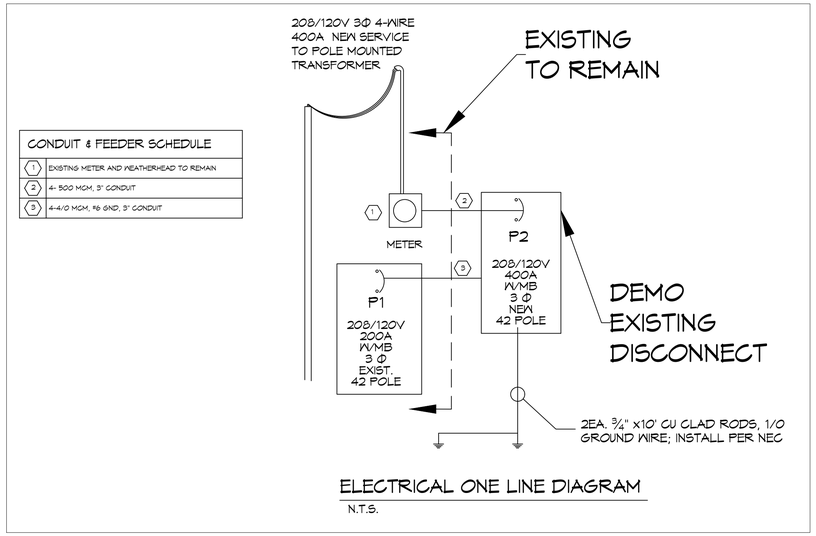

ELECTRICAL ONE LINE DIAGRAM

N.T.S.

RISER DIAGRAM

SCALE: NTS

PANEL SCHEDULE

PANEL: P1 (EXISTING)
LOCATION: OUTSIDE NEAR SERVICE
FEEDER SOURCE: CLECO

VOLTAGE: 120/240V, 200A, 3Φ, 4W W/200A MB
ENCLOSURE: EXISTING 3Φ PANEL USED AS 1Φ SURFACE MOUNTED

CKT NO	THHN WIRE SIZE	LOAD DESCRIPTION LOCATION	BREAKER AMP	BREAKER POLE	LOAD (VA)	LOAD (VA)	BREAKER POLE	BREAKER AMP	LOAD DESCRIPTION LOCATION	THHN WIRE SIZE	CKT NO
1	-	LIGHTS & OUTLETS (DBL BREAKER EACH 20AMP)		1	1.6	1.6	1		UPSTAIRS LIGHTS & OUTLETS (DBL BREAKER EACH 20AMP)	-	2
3	-	CU #1	50	2	3.9	10.0	2	100	AHU #1	-	4
5					3.9	10.0					6
7											8
9									BLANK		10
11											12
13	-	CU #3	50	2	3.9	10.0	2	100	AHU #3	-	14
15					3.9	10.0					16
17	-	AHU #2	60	2	6.4						18
19					6.4						20
21									BLANK		22
23	-	CU #2	30	2	2.2	1.2	1	20	UPSTAIRS HEATER	-	24
25					2.2	1.2	1	20	UPSTAIRS BATH	-	26
27		BLANK							BLANK		28
29	-	KITCHEN AND DINING RM LIGHTS (DBL BREAKER 20 AMPS)	20	1	1.6	1.6	1	20	PATIO AND MAIN DINING LIGHTS (DBL BREAKER EACH 20AMP)	-	30
31	-	SPARE	20	1	-	-	1	20	SPARE	-	32
33		BLANK							BLANK		34
35	-	SPARE	20	1	-	-	1	20	SPARE	-	36
37	-	SPARE	20	1	-	-	1	20	SPARE	-	38
39		BLANK							BLANK		40
41	-	SPARE	20	1	-	-	1	20	SPARE	-	42

SOLID NEUTRAL
NEUTRAL WIRE (N)

TOTAL CONNECTED LOAD (kva) = 81.6

AΦ = 26.9 BΦ = 27.8 CΦ = 26.9

GROUND BUS
GROUND WIRE (G)

PANEL SCHEDULE

PANEL: P2
LOCATION: OUTSIDE NEAR SERVICE
FEEDER SOURCE: CLECO

VOLTAGE: 120/240V, 400A, 3Φ, 4W W/400A MB
ENCLOSURE: SURFACE MOUNTED W/ EQUIPMENT GND BAR SQ D TYPE QO LOAD CENTER, 22K AIC

CKT NO	THHN WIRE SIZE	LOAD DESCRIPTION LOCATION	BREAKER AMP	BREAKER POLE	LOAD (VA)	LOAD (VA)	BREAKER POLE	BREAKER AMP	LOAD DESCRIPTION LOCATION	THHN WIRE SIZE	CKT NO
1	-	COOLER CONDENSER FAN & LIGHTS #17	20	1	1.5	1.7	2	30	COOLER REMOTE COMPRESSOR #17	-	2
3	-	FREEZER CONDENSER, DEFROST & LIGHTS #17	20	2	1.1	1.7					4
5					1.1	2.4	2	20	FREEZER REMOTE COMPRESSOR #17	-	6
7	-	DISHWASHER, #6	20	1	1.4	2.4					8
9	-	REACH IN COOLER, #7	15	1	0.4	0.7	1	15	REACH IN FREEZER, #8	-	10
11	-	BAR DISHWASHER, #10	35	2	3.0	0.4	1	15	REACH IN, #14	-	12
13					3.0	1.0	1	15	HOOD SYSTEM CONTROL PANEL, #15	-	14
15	-	HOOD SYSTEM EXHAUST FAN, #15	35	1	2.3	1.4	1	15	HOOD SYSTEM SUPPLY FAN, #15	-	16
17	-	REACH IN COOLER, #7	15	1	0.4	0.8	1	15	PREP TBL, #16	-	18
19	-	PIZZA OVEN, #20	40	2	3.1	1.1	1	15	ICE MACHINE	-	20
21					3.1	3.1	2	30	AHU #4, 4.5 KW HEAT	-	22
23	-	CU #4, 4 TON HEAT PUMP	30	2	2.9	3.1					24
25					2.9	-	1	20	SPARE	-	26
27	-	BAR LIGHTS	20	1	.5	6.2	2	30	HOT WATER HEATER	-	28
29	-	KITCHEN LIGHTS	20	1	.5	6.2					30
31	-	SPARE	20	1	-						32
33	-	SPARE	20	1	-						34
35											36
37					26.9						38
39	4/0	SUB PANEL	200	3	27.8						40
41					26.9						42

SOLID NEUTRAL
NEUTRAL WIRE (N)

TOTAL CONNECTED LOAD (kva) = 140.0

AΦ = 45.0 BΦ = 47.8 CΦ = 47.2

GROUND BUS
GROUND WIRE (G)

NOTE: ON PANEL P-1, MOVE EXISTING CB TO LOCATION SHOWN TO BALANCE THE LOADS.

DAMMON ENGINEERING, INC.
LOUISIANA & MISSISSIPPI
www.dammonengineering.com
info@dammonengineering.com
PH: 985.649.5924
Chief Engineer: Brian Mistich, PE
554 Old Spanish Trail
Slidell, LA 70458

REVISIONS

#	DESCRIPTION	DATE

SEAL:

STATE OF LOUISIANA
BRIAN A. MISTICH
License No. 30187
PROFESSIONAL ENGINEER
5/17/2024

RESTAURANT
CAMELLIA POINT
2989 PONTCHARTRAIN DRIVE
SLIDELL, LA 70458

JOB No: 2024 | DATE: 05/17/2024
DRAWN BY: CCD | CHECKED BY: BAM

THE CONTENTS, DESIGNS, DRAWINGS, SPECIFICATIONS, COMPUTATIONS, AND OTHER WORK PRODUCT CONTAINED IN THIS DOCUMENT, WHETHER IN HARD COPY OR ELECTRONIC FORMAT, ARE INSTRUMENTS OF SERVICE OF DAMMON ENGINEERING, INC. AND ARE PROPRIETARY, CONFIDENTIAL AND THE PROPERTY OF DAMMON ENGINEERING, INC. ANY USE, REPRODUCTION, OR DISTRIBUTION OF THE DOCUMENT OR ANY PART THEREOF WITHOUT THE WRITTEN CONSENT OF DAMMON ENGINEERING, INC. IS PROHIBITED. ANY REPRODUCTION OF THE DOCUMENT OR ANY PART THEREOF MUST INCLUDE THIS NOTICE.

SHEET TITLE:
POWER PANELS, AND ONE LINE DIAGRAM

DRAWING NUMBER:
E104

SHEET No: 4 of 7