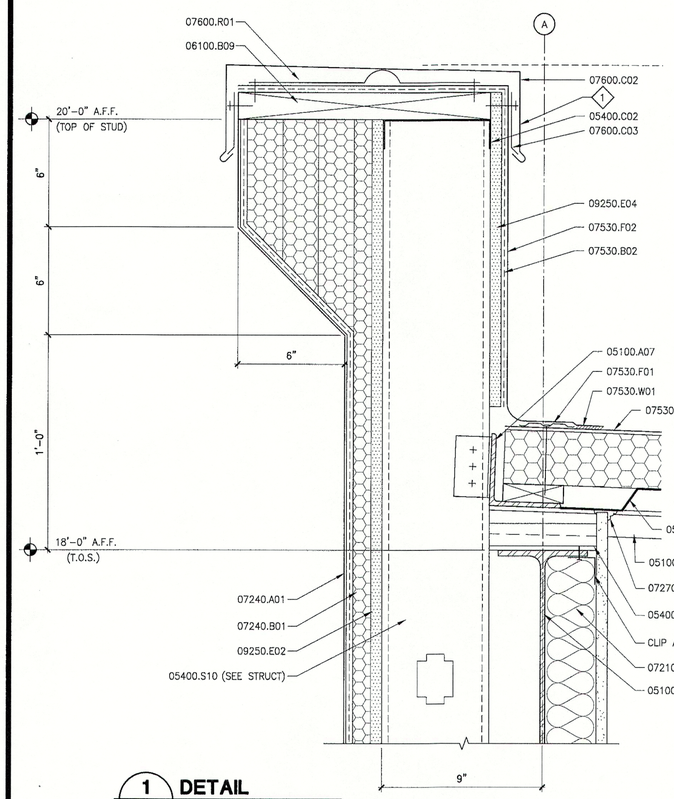

1 DETAIL 3A5.1 3" = 1'-0"

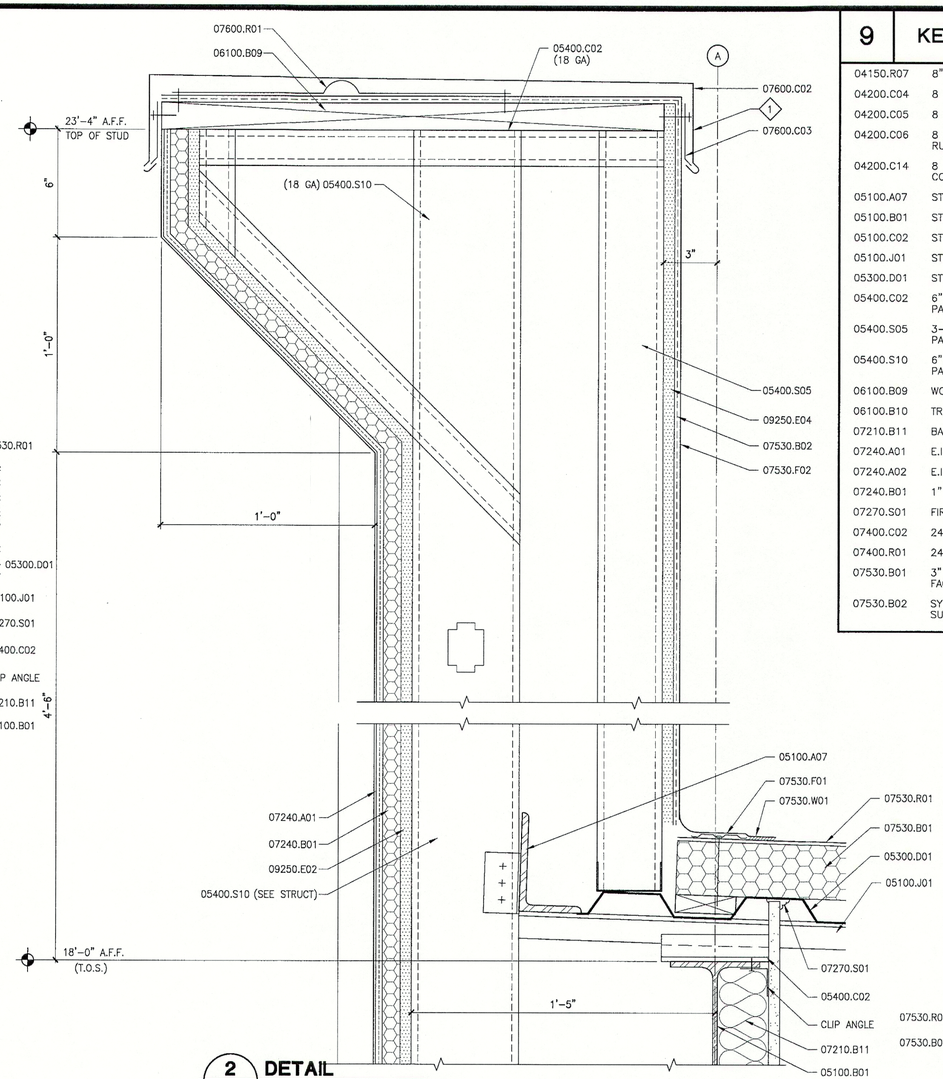

2 DETAIL 2A5.1 3" = 1'-0"

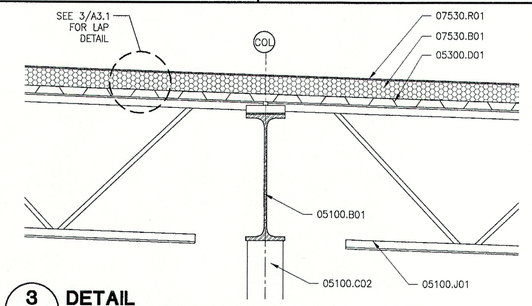

3 DETAIL 1A5.1 1" = 1'-0"

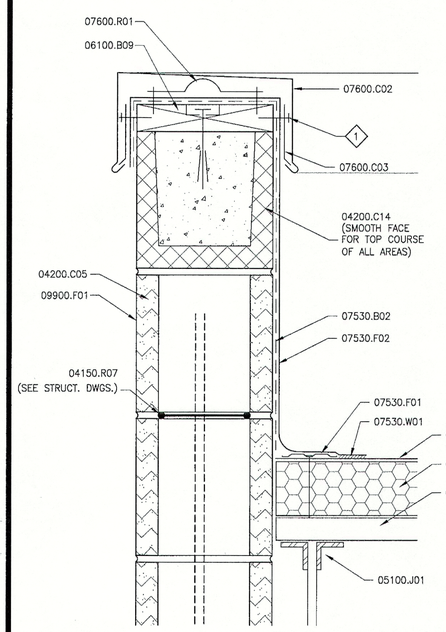

4 DETAIL 7A5.1 3" = 1'-0"

NOTE: PROVIDE SPLIT-FACED C.M.U. AT SIDE WALLS, SMOOTH-FACED C.M.U. AT REAR WALLS.

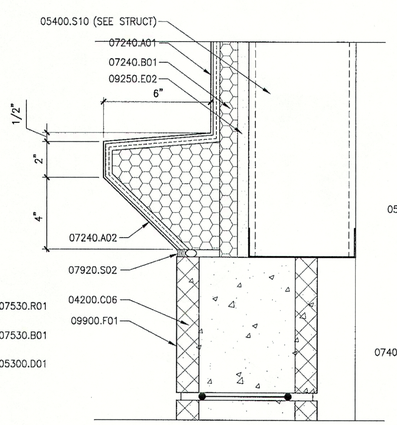

7 DETAIL 5A4.1 1/2" = 1'-0"

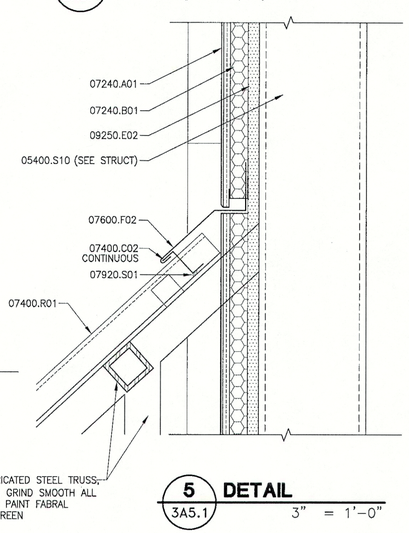

5 DETAIL 3A5.1 3" = 1'-0"

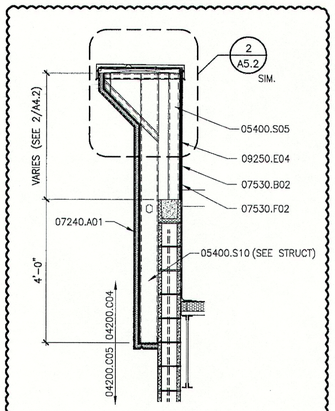

8 DETAIL 3A5.1 3" = 1'-0"

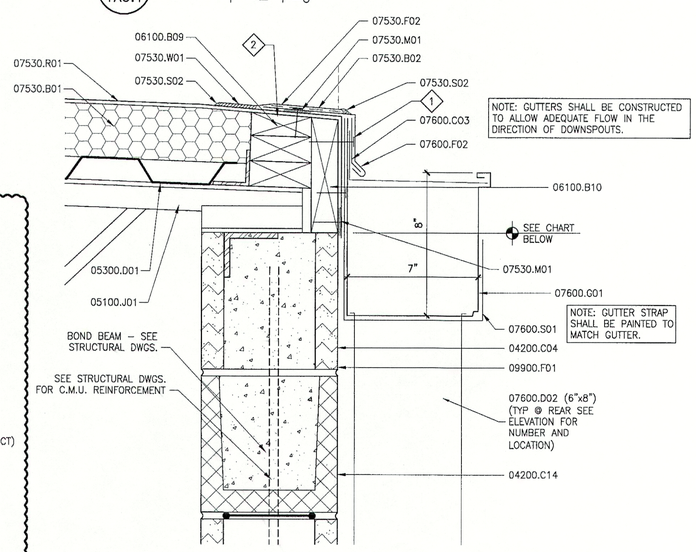

NOTE: GUTTERS SHALL BE CONSTRUCTED TO ALLOW ADEQUATE FLOW IN THE DIRECTION OF DOWNSPOUTS.

NOTE: GUTTER STRAP SHALL BE PAINTED TO MATCH GUTTER.

6 DETAIL 4A5.1 3" = 1'-0"

TOP OF MASONRY ELEVATIONS:

ARCHITECTURAL FINISH FLOOR ELEVATION = +100.00'
COL. LINE 1 TO 14: 115.33' (15'-8" A.F.F.) (70' BAY)
COL. LINE A TO J: 114.67' (14'-8" A.F.F.) (100' BAY)

9 KEYNOTES

04150.R07	8" GALV TRUSS TYPE REINF @ 16" O.C. HORIZ.
04200.C04	8 x 8 x 16 C.M.U., SMOOTH FACED, RUNNING BOND
04200.C05	8 x 8 x 16 C.M.U., SPLIT FACED, RUNNING BOND
04200.C06	8 x 8 x 16 C.M.U., SPLIT FACED, SCORED, RUNNING BOND
04200.C14	8 x 8 x 16 C.M.U. U-BLOCK, SMOOTH FACED, CONC. FILL W/ #5 BARS
05100.A07	STEEL ANGLE, SEE STRUCTURAL
05100.B01	STEEL BEAM, SEE STRUCTURAL
05100.C02	STEEL TUBE COLUMN, SEE STRUCTURAL
05100.J01	STEEL BAR JOIST, SEE STRUCTURAL
05300.D01	STEEL DECK, SEE STRUCTURAL
05400.C02	6" MTL. CHANNEL TRACK, (GAUGE AS SHOWN IN PARENTHESIS)
05400.S05	3-5/8" MTL. STUD @ 24" O.C., GAUGE AS SHOWN IN PARENTHESIS
05400.S10	6" MTL. STUD @ 16" O.C., GAUGE AS SHOWN IN PARENTHESIS
06100.B09	WOOD BLOCKING AS REQ'D
06100.B10	TREATED WOOD BLOCKING AS REQ'D
07210.B11	BATT INSULATION: 5-1/2" THICK, R-19, KRAFT-FACED
07240.A01	E.I.F.S. OVER INSULATION BOARD, SEE DETAILS
07240.A02	E.I.F.S. ACCENT BAND
07240.B01	1" EPS INSULATION BOARD, ADHESIVE ATTACHED
07270.S01	FIRESAFING SEALANT
07400.C02	24 GA. PREFIN. METAL CLOSURE CLIP
07400.R01	24 GA. PREFIN. METAL STANDING SEAM ROOF
07530.B01	3" POLYISO. BD. WITH MED-WT. FIBER REINF. FELT FACED, MECH. FASTENED
07530.B02	SYNTHETIC RUBBER ADHESIVE APPLIED TO BOTH SURFACES PER MANUF. RECOMMENDATIONS
07530.F01	HEAVY DUTY #15 THREADED FASTENER WITH 2-3/8" DIA. METAL BARBED FASTENING PLATE
07530.F02	SINGLE CONTINUOUS SHEET REINFORCED FLASHING MEMBRANE
07530.M01	T.P.O. WATER CUT-OFF MASTIC
07530.R01	T.P.O. MEMBRANE, MECH. FASTENED
07530.S02	T.P.O. MEMBRANE SEALANT
07530.W01	HOT AIR WELD PER MFG. RECOMMENDATION
07600.C02	24 GA. PREFIN. METAL COPING
07600.C03	20 GA. CONT. METAL CLIP
07600.D02	24 GAUGE PREFIN. METAL DOWNSPOUT
07600.F02	24 GA PREFIN. METAL FLASHING
07600.G01	24 GA. PREFIN. MTL. GUTTER
07600.R01	S.S. SPRING LOCK, CONT
07600.S01	1" x 1/8" GUTTER STRAP @ 36" O.C.
07920.S01	FLEXIBLE SEALANT
07920.S02	FLEXIBLE SEALANT W/ BACKER ROD
09250.E02	5/8" EXTERIOR GYPSUM SHEATHING, GLASS MAT FACING
09250.E04	5/8" GLASS MAT ROOF DECKING BOARD
09900.F01	PAINT WITH EXTERIOR PAINT MATERIAL

10 SPECIFIC NOTES

1. EXPOSED FASTENERS WILL ONLY BE ALLOWED WITH PRIOR APPROVAL OF OWNER.
2. RIP BLOCKING TO SLOPE AS NEEDED TO AVOID PONDING OF WATER AT ROOF EDGE.

DATE	DESCRIPTION	BY
3/4/08	REV #3	CJC
9/17/07	REV #1	LMR

REVISION

DDG DUPLANTIS DESIGN GROUP, PC
Respect • Integrity • Client Satisfaction • Excellence
THIBODAUX MANDEVILLE HOUSTON
Civil Engineering • Site Development • Land Planning • Public Works • Architecture
314 East Bayou Road Phone: 985.447.0090
Thibodaux, Louisiana 70301 Fax: 985.447.0093

STAMP: STEPHEN H. WIGGINS, No. 32132, STATE OF LOUISIANA, REGISTERED ARCHITECT

SIGNATURE:

DATE: 3/5/08

PROPOSED RETAIL DEVELOPMENT
CITY OF BOUTTE
ST. CHARLES PARISH, LOUISIANA

FOR THE SPECTRA GROUP, INC.
MEMPHIS, TENNESSEE

DRAWN	LMR
CHECKED	SMV
DATE	8/13/07
SCALE	AS NOTED ON DWG
PROJECT NO.	07-205A
FILE:	REVISION 3\A5-2.DWG
SHEET	A5.2