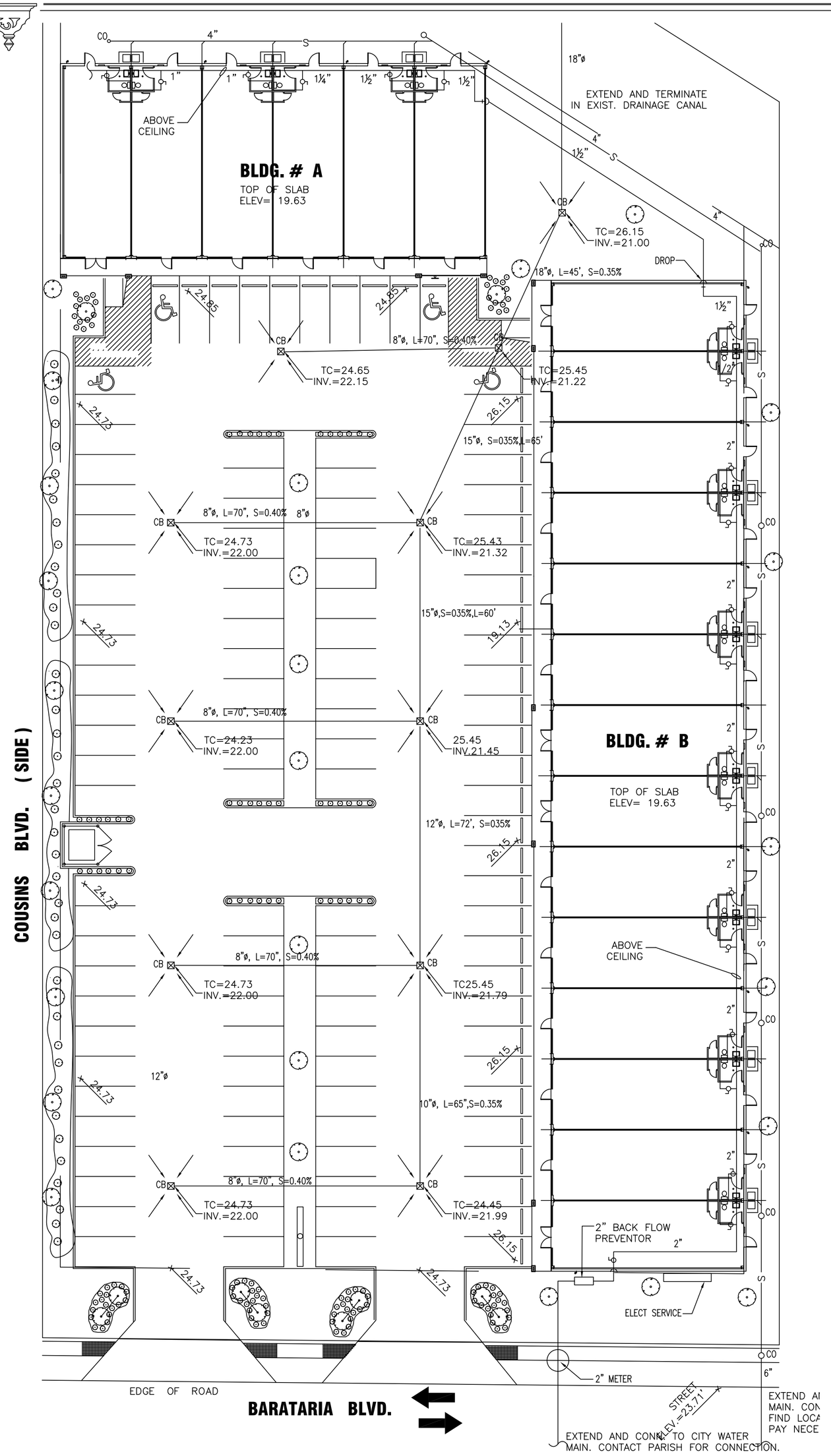

1 P1 SITE PLAN – PLUMBING
SCALE: SCALE: 1" = 20'-0"

GENERAL NOTES:

1. PRIOR TO CONSTRUCTION, THE CONTRACTOR SHALL FIELD VERIFY ALL UTILITIES.
2. INV. AND ELEV. SHOWN ARE APPROX. CONTRACTOR SHALL SET ELEV. AND INV. IN FIELD BASED ON BUILDING ELEV.

GENERAL NOTES FOR DRAINTIE–IN:

1. FOR CONCRETE STRUCTURES, CORE–DRILL REQUIRED OR DRILL HOLES AROUND THE PERIMETER OF THE REQUIRED OPENING UNTIL THE SECTION CAN BE TAKEN OUT WITHOUT DAMAGE TO THE STRUCTURE. FOR LARGE STRUCTURES, SAW–CUTTING MAY BE REQUIRED. FOR ANY METHOD, ALLOW ADEQUATE SPACING FOR PLACING NON–SHRINK GROUT. ANY REINFORCEMENT LEFT IN PLACE SHALL BE INCORPORATED IN THE PATCH WORK.
2. FOR BRICK STRUCTURES CHISEL OR DRILL OUT THE REQUIRED OPENING AND INSERT PIPE. REPLACE GAPS AND CRACKS WITH NEW BRICK AND MORTAR AND PLACE NON–SHRINK GROUT BETWEEN PIPE AND THE WALL. GROUT SHALL BE MIN. OF ½" THICK IN THE INSIDE AND OUTSIDE WALLS OF THE STRUCTURES AROUND THE OPENING TO COVER THE BRICK SURFACES.
3. NEW PLASTIC PIPE FOR THE DRAIN TIE–IN SHALL BE COATED WITH AN APPROVED EPOXY AND ROLLED IN MORTAR SAND TO PROVIDE A BONDING SURFACE BETWEEN THE OUTER PIPE WALL AND THE PATCH MATERIAL. CONTRACTOR HAS THE OPTION OF PURCHASING PIPE STUBS WITH PREPARED SURFACES FROM SUPPLIERS.

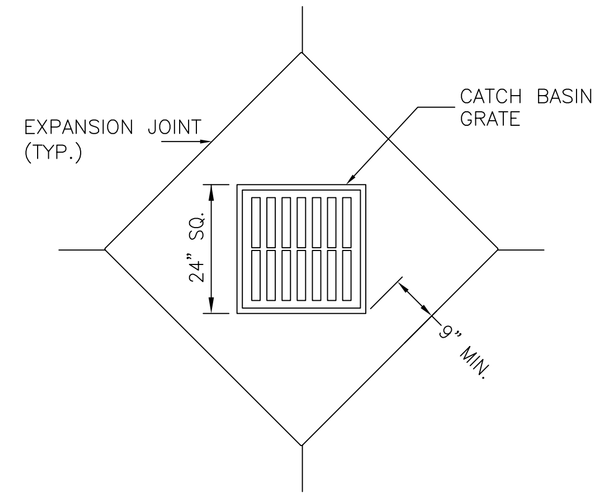

2 DROP INLET PLAN
SCALE: N.T.S.

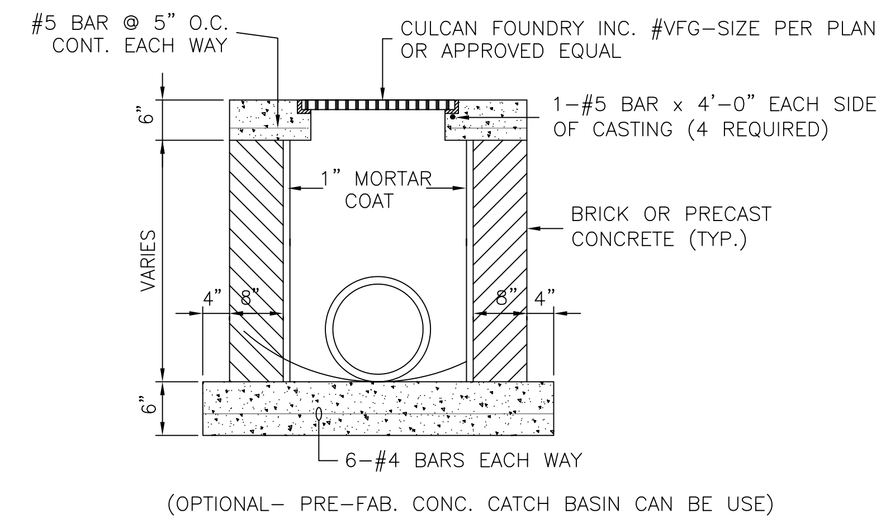

(OPTIONAL– PRE–FAB. CONC. CATCH BASIN CAN BE USE)

4 TYPICAL DROP–INLET DETAIL
SCALE: N.T.S.

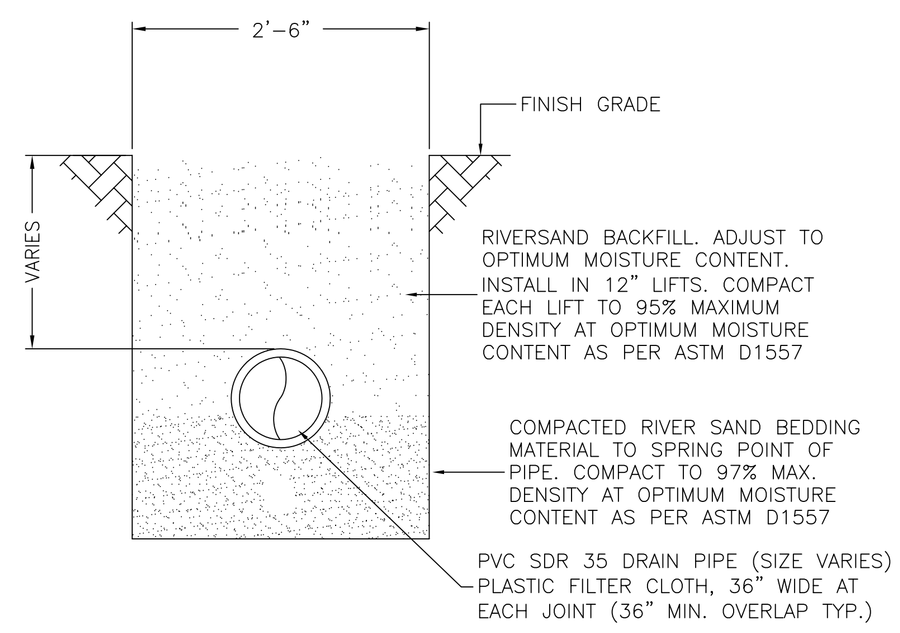

3 PIPE BEDDING DETAIL
SCALE: N.T.S.

DATE: 03 / 22 / 07 FOR PERMIT

THESE PLANS AND SPECIFICATIONS HAVE BEEN PREPARED BY OR UNDER MY CLOSE SUPERVISION, AND TO THE BEST OF MY KNOWLEDGE AND BELIEF THEY COMPLY WITH ALL CITY REQUIREMENTS AND THAT I / AM NOT / ADMINISTERING THE WORK.

ENGINEER _____

LICENSE NO. 20491

M–K ENGINEERING, INC.
CONSULTING ENGINEERS
HVAC–PLUMBING–FIRE PROTECTION–ELECTRICAL
4323 Division Street, Suite 211
Metairie, LA 70002
Tel:(504) 887–2376, Fax:(504) 887–2302
Email: MKansagra@M–K–E.com
M–K Project No.: 0737

Olde Orleans Designs
112 Bent Tree Ct., Covington, La 70433

BARATERIA PLAZA
MARRERO, LOUISIANA

P–1