## PLUMBING ABBREVIATION LEGEND

| | | |
|---|---|---|
| @ | — | AT |
| ABV | — | ABOVE |
| A.F.F. | — | ABOVE FINISH FLOOR |
| WC | — | WATER CLOSET |
| CLG | — | CEILING |
| CO | — | CLEANOUT |
| CONN | — | CONNECT/CONNECTION |
| CONT | — | CONTINUATION |
| 3CS | — | THREE COMPARTMENT SINK |
| 4CS | — | FOUR COMPARTMENT SINK |
| CW | — | COLD WATER |
| D | — | DISPOSAL |
| DF | — | DRINKING FOUNTAIN |
| DRWG | — | DRAWING |
| DW | — | DISHWASHER |
| EA | — | EACH |
| EXT | — | EXTEND |
| FAC | — | FURNACE/AIR COND. |
| FCO | — | FLOOR CLEANOUT |
| FD | — | FLOOR DRAIN |
| FFE | — | FINISH FLOOR ELEVATION |
| FIXT | — | FIXTURE |
| FL | — | FLOOR |
| FPWH | — | FREEZE PROOF WALL HYDRANT |
| FS | — | FLOOR SINK |
| GC | — | GENERAL CONTRACTOR |
| GT | — | GREASE TRAP |
| HB | — | HOSE BIBB |
| HW | — | HOT WATER |
| L | — | LAVATORY |
| LOC | — | LOCATION |
| MC | — | MECHANICAL CONTRACTOR |
| MS | — | MOP SINK |
| MTD | — | MOUNTED |
| NG | — | NATURAL GAS |
| PC | — | PLUMBING CONTRACTOR |
| PME | — | PLUMBING/MECHANICAL/ELECTRICAL |
| REF | — | REFER/REFERENCE |
| RTU | — | ROOF TOP HVAC UNIT |
| SS | — | SANITARY SEWER |
| T&P | — | TEMPERATURE AND PRESSURE |
| TP | — | TRAP PRIMER |
| TYP | — | TYPICAL |
| UR | — | URINAL |
| V | — | VENT |
| VS | — | VEGETABLE SINK |
| VTR | — | VENT THROUGH ROOF |
| W | — | WASTE |
| W/ | — | WITH |
| WB | — | WASHER BOX |
| WCO | — | WALL CLEANOUT |
| WH | — | WATER HEATER |
| WM | — | WATER METER |
| | — | CONNECT NEW TO EXISTING |

NOTE : ALL ABBREVIATIONS MAY NOT APPLY

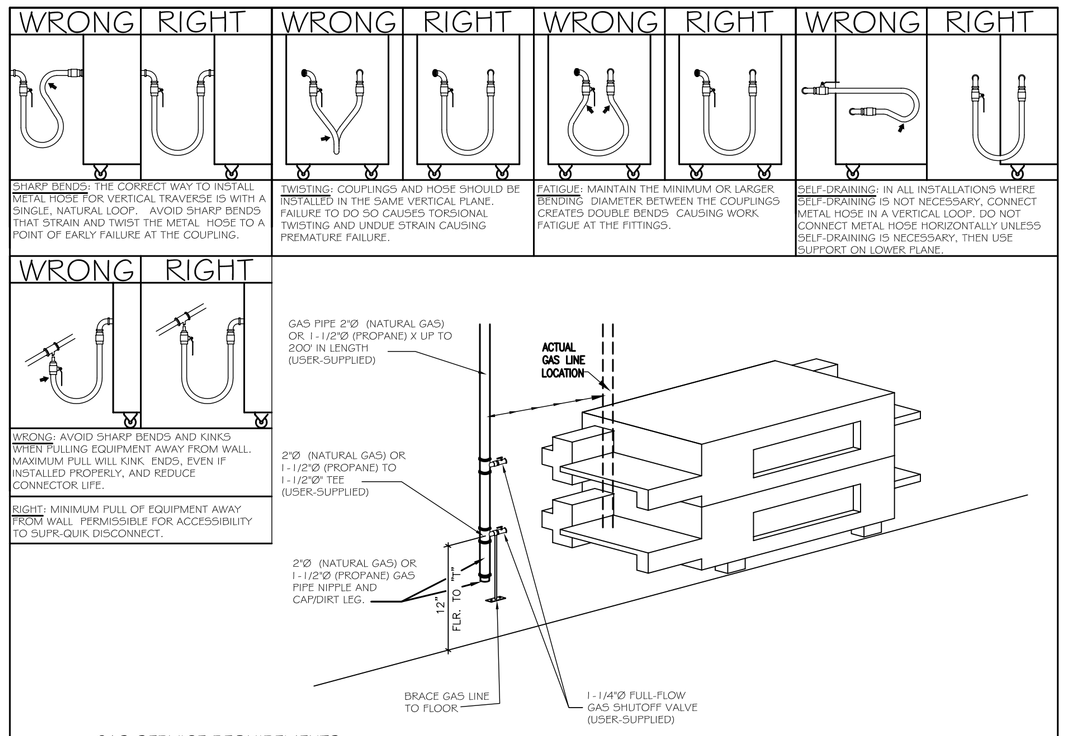


GAS SERVICE REQUIREMENTS
REQUIRED GAS PRESSURE
NATURAL: 6" - 14" WC

PS360 WB-D OVENS ROUGH - IN ISOMETRIC
NO SCALE (HOOD NOT SHOWN)

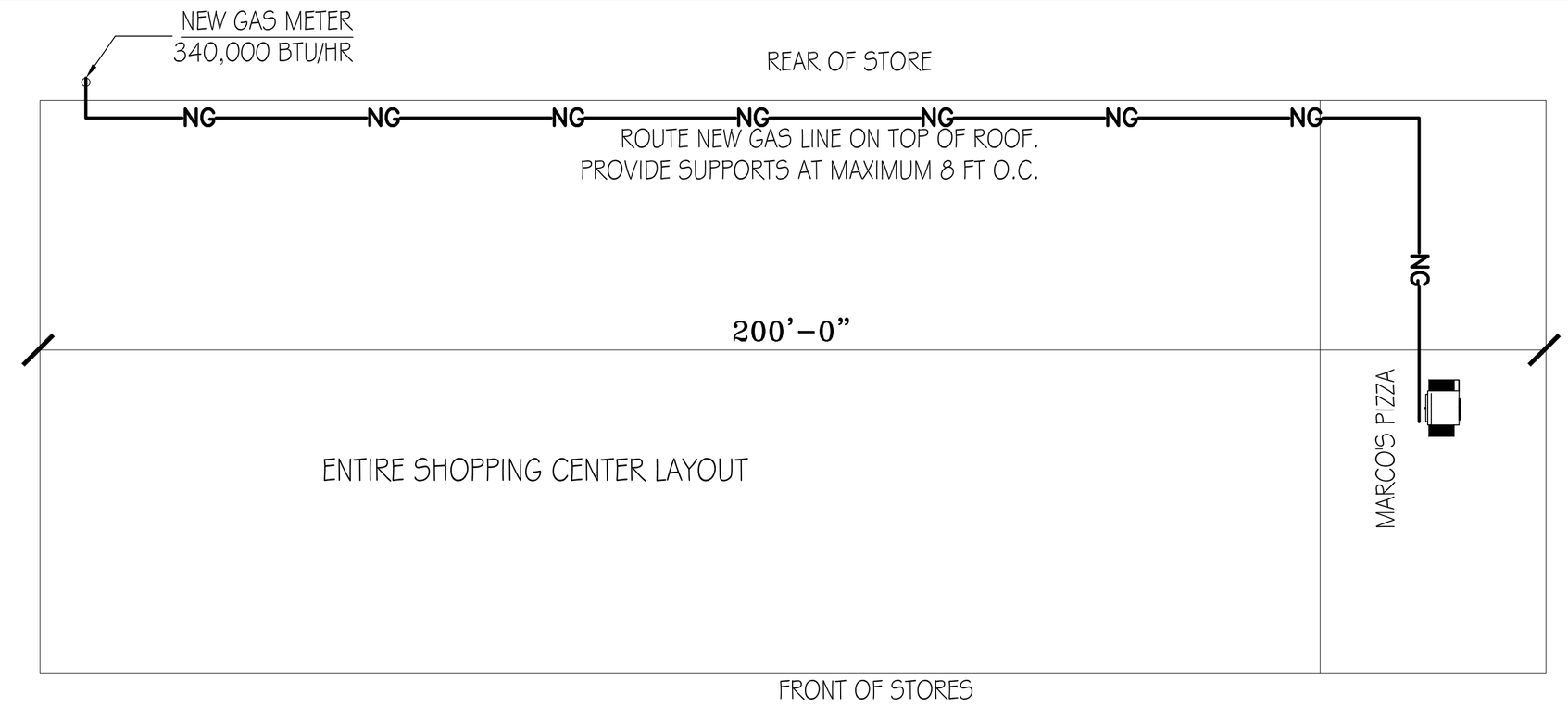


NATURAL GAS ROUTING PLAN
SCALE: N.T.S.

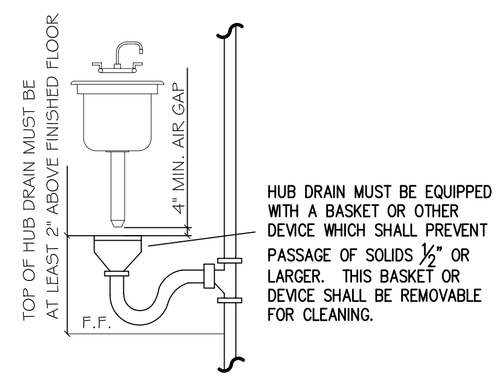


TYPICAL FLOOR SINK WITH HUB DRAIN
N.T.S.

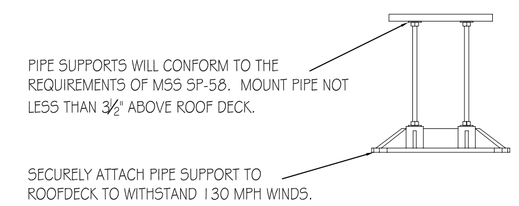


TYPICAL ROOFTOP GAS PIPING SUPPORTS
N.T.S.

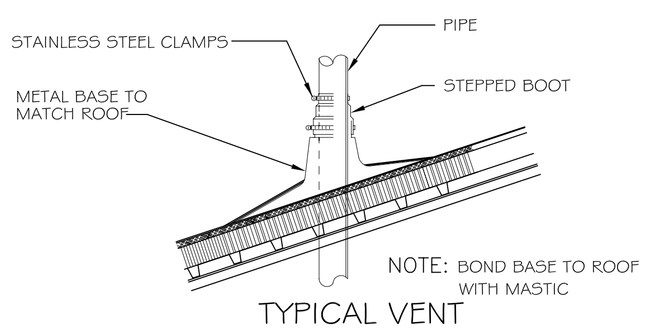


TYPICAL VENT THRU ROOF DETAIL
N.T.S.

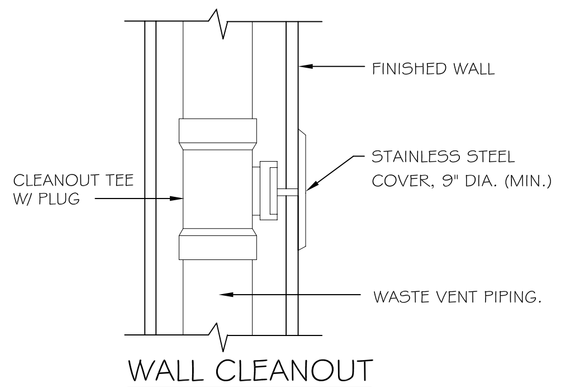


WALL CLEANOUT DETAIL
N.T.S.

NOTE:
1. P.C. SHALL FIELD VERIFY ALL DIMENSIONS.
2. GAS PIPING SHALL BE ROUTED ON TOP OF ROOF SYSTEM. ATTACH PIPING TO ROOF SYSTEM USING GAS PIPING SUPPORT SEE DETAIL THIS PAGE.
3. PROVIDE A WEATHER PROOF BOOT MADE FOR ROOF SYSTEM FOR PIPE ENTERING SUITE. WHEN INSIDE THE SUITE INSTALL CONDUIT TIGHT TO Z-CHANNEL.

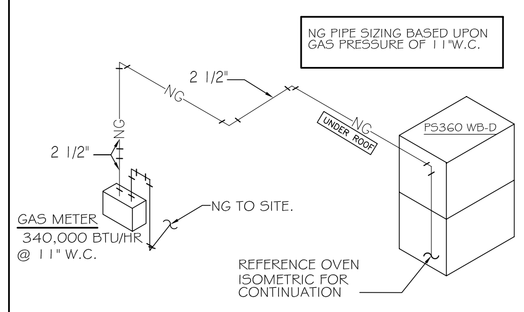


| EQUIPMENT | BTUH INPUT |
|---|---|
| CONVECTION OVEN (2) | 340,000 |
| | |
| | |
| | |
| TOTAL USAGE | 340,000 |
| APPROX. DISTANCE FROM REGULATOR TO FARTHEST TAKE OFF 62' | |
| GAS TYPE: | NATURAL GAS |

NATURAL GAS PIPING DIAGRAM

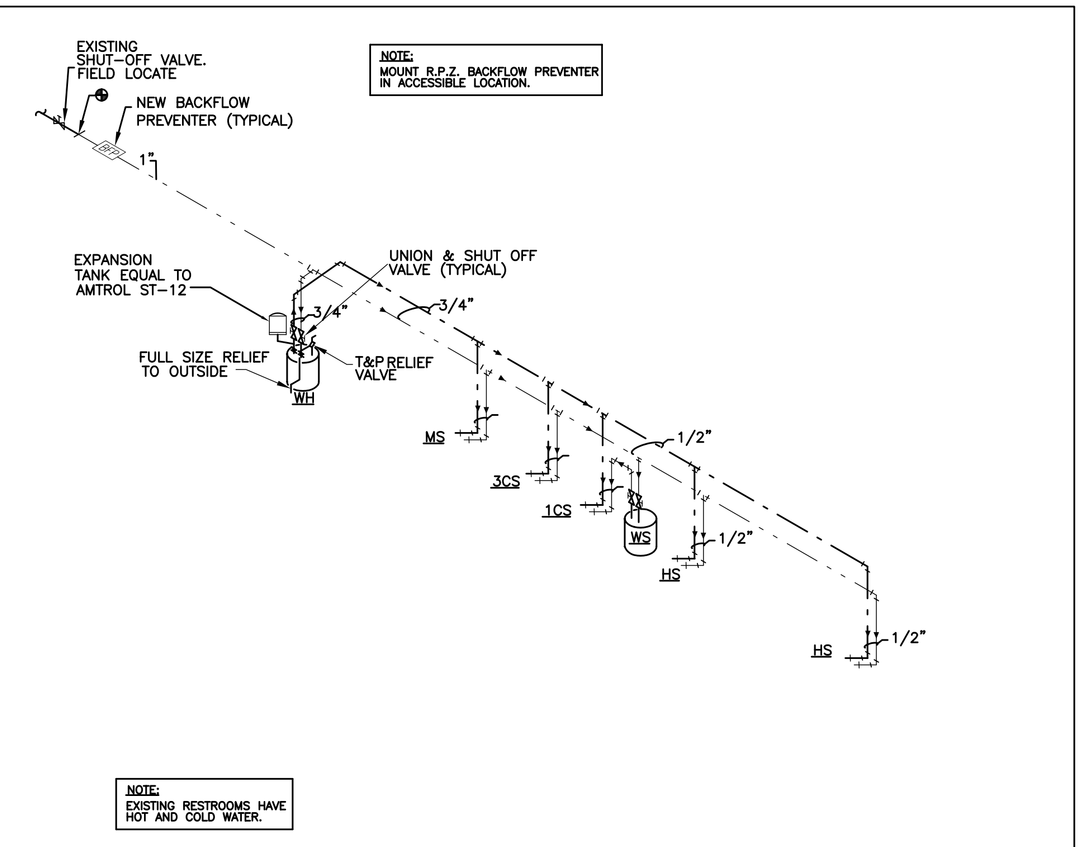


NOTE:
MOUNT R.P.Z. BACKFLOW PREVENTER IN ACCESSIBLE LOCATION.

NOTE:
EXISTING RESTROOMS HAVE HOT AND COLD WATER.

WATER RISER DIAGRAM
N.T.S.

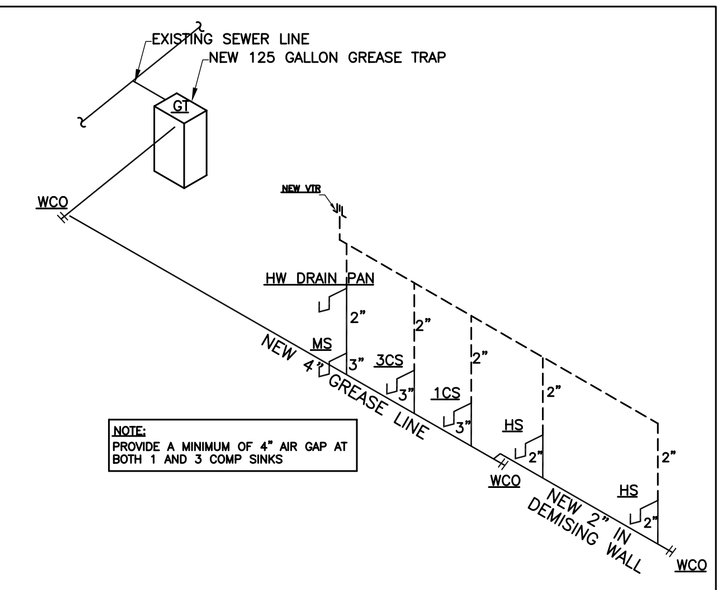


NOTE:
PROVIDE A MINIMUM OF 4" AIR GAP AT BOTH 1 AND 3 COMP SINKS

NOTE:
EXISTING RESTROOMS ARE CONNECTED TO SANITARY SEWER

WASTE AND VENT RISER DIAGRAM
N.T.S


DAMMON ENGINEERING, INC.
EMMETT DAMMON

ARCHITECT
ROBERT WILTSE

1095 FLORIDA AVENUE
SLIDELL, LA. 70458
985-649-5832

WEBSITE:
WWW.DAMMONENGINEERING.COM

EMAIL:
DAMMONENG@BELLSOUTH.NET


ARCHITECTURE
ENGINEERING
STUDIES
PLANNING
INVESTIGATION
EXPERT WITNESS

MARCO'S PIZZA TENANT BUILDOUT

4638 Hwy. 22
Mandeville
Louisiana
70471-2820

PLUMBING DETAILS

SCALE: AS NOTED
JOB#: 2107
DATE: 5-25-11
SHEET 11

P-2

OF 11