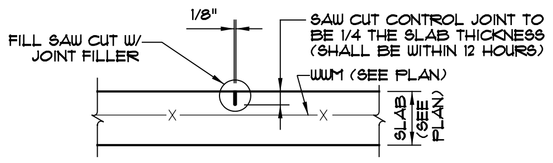

"SAW CUT CONTROL JOINTS"

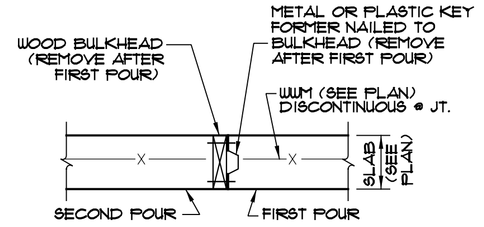

"SLAB CONSTRUCTION JOINT"

DETAIL 1/S301
SCALE: 1" = 1'-0"

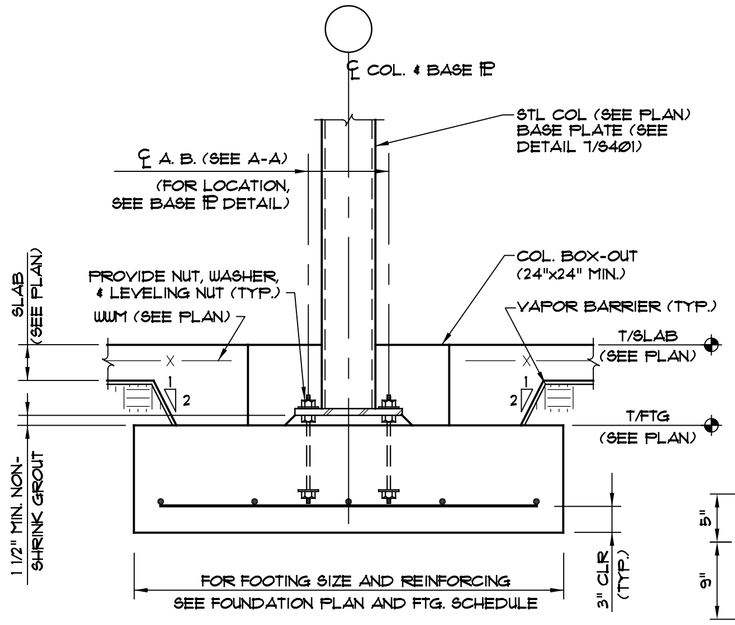

SECTION 2/S301
SCALE: 1" = 1'-0"

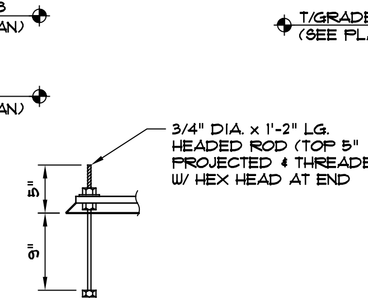

ANCHOR BOLT (TYPICAL)

"A-A"

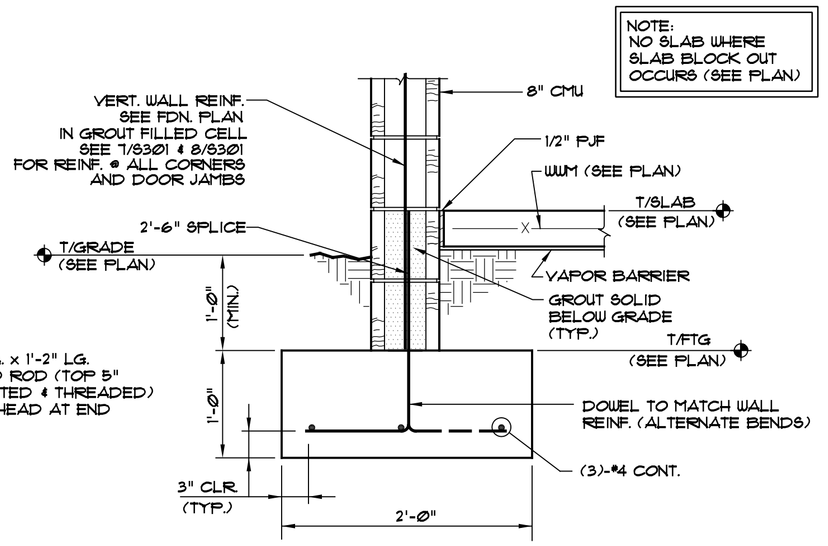

SECTION 3/S301
SCALE: 1" = 1'-0"

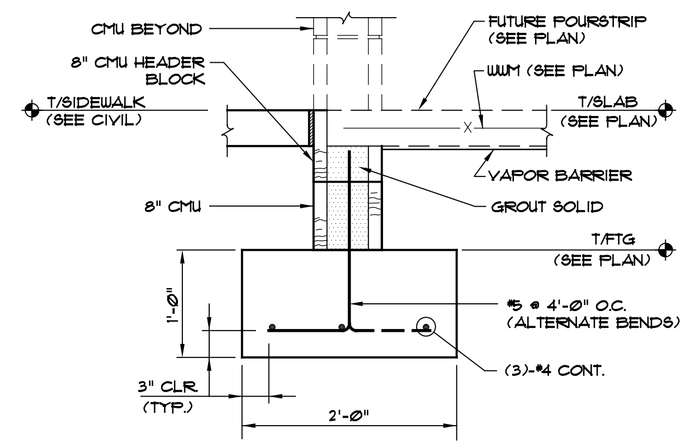

SECTION 4/S301
SCALE: 1" = 1'-0"

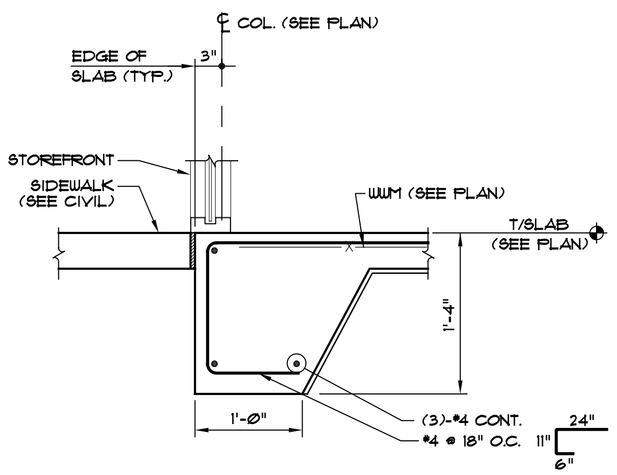

SECTION 5/S301
SCALE: 1" = 1'-0"

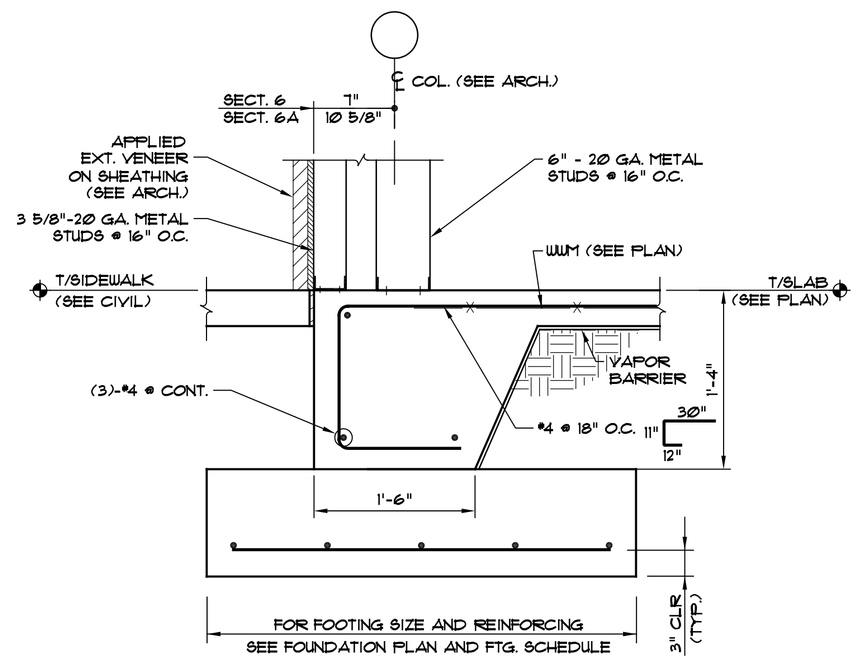

SECTION 6/S301 6A/S301
SCALE: 1" = 1'-0"

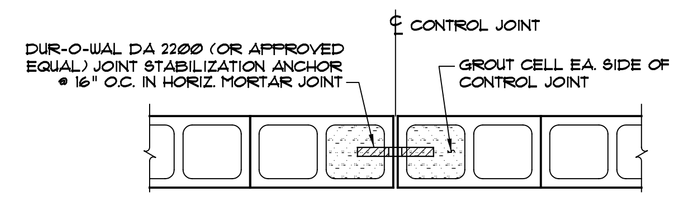

"@ INTERIOR WALL"

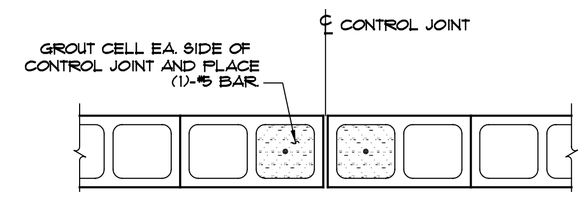

"@ EXTERIOR WALL"

NOTES:
1. SPACING OF CONTROL JOINTS IN INTERIOR/EXTERIOR CMU WALL SHALL NOT EXCEED 40'-0".
2. SEE ARCH. DWGS. FOR EXACT LOCATION OF CONTROL JOINTS.
3. HORIZ. JOINT REINF. TO STOP AT EACH SIDE OF CONTROL JOINT.

"TYP. CMU CONTROL JT."

DETAIL 7/S301
SCALE: 1" = 1'-0"

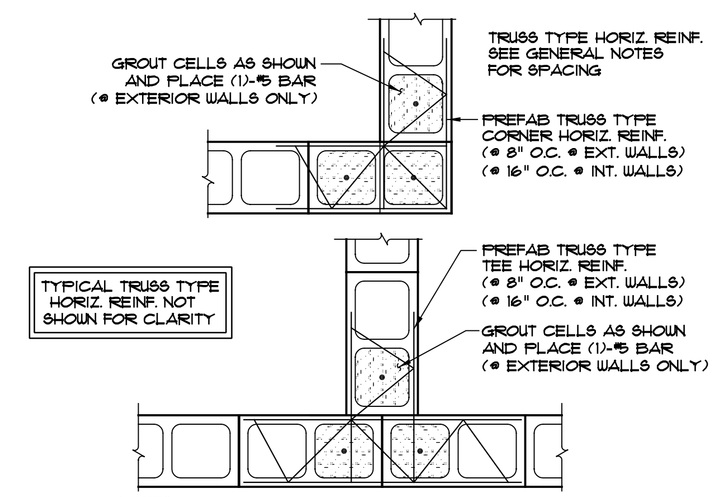

NOTES:
1. CORNER/INTERSECTION REINF. SHALL BE LAPPED WITH THE TYPICAL TRUSS TYPE HORIZ. REINF. & EXTEND A MINIMUM OF 30" IN EACH DIRECTION AT THE INTERSECTION.
2. SEE GENERAL NOTES FOR SPACING OF TYPICAL HORIZ. REINF.

"TYP. NON-COLUMN CMU WALL CORNER/INTERSECTION"

DETAIL 8/S301
SCALE: 1" = 1'-0"

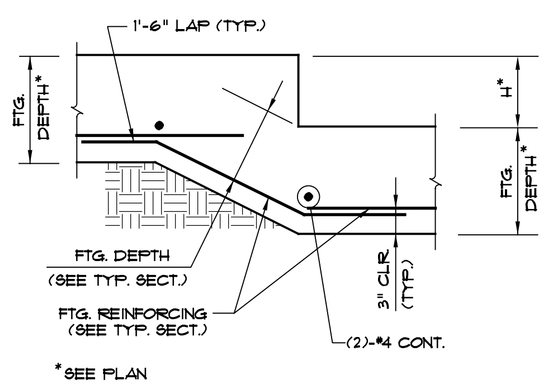

"TYPICAL STEPPED FOOTING"

DETAIL 9/S301
SCALE: 1" = 1'-0"

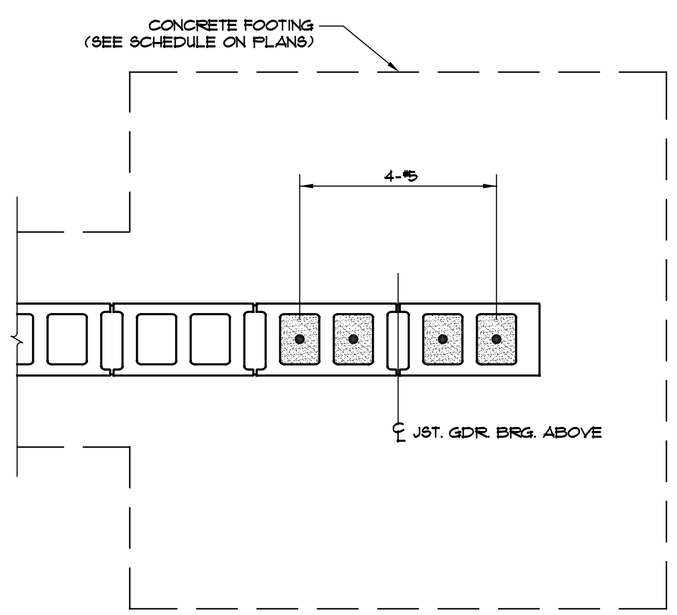

DETAIL 10/S301
SCALE: 1" = 1'-0"

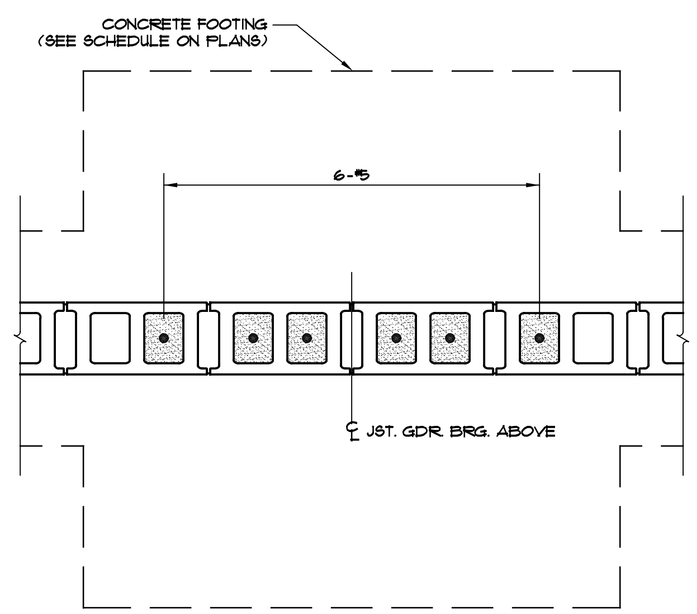

DETAIL 11/S301
SCALE: 1" = 1'-0"

PRUITT EBERLY STONE
STRUCTURAL ENGINEERS
1852 CENTURY PLACE · SUITE 201 · ATLANTA, GEORGIA 30345
TEL: 770.457.5923 FAX: 770.457.9989
WWW.PESENGINEERS.COM

THIS DRAWING IS THE PROPERTY OF LYMAN DAVIDSON DOOLEY INCORPORATED ARCHITECTS. IT IS NOT TO BE REPRODUCED IN WHOLE OR IN PART. IT IS NOT TO BE USED ON ANY OTHER PROJECT. IT SHALL BE RETURNED UPON REQUEST. COPYRIGHT AS DATED LYMAN DAVIDSON DOOLEY. NOT VALID UNLESS SIGNED AND SEALED.

ARCHITECTURE
PLANNING
INTERIOR DESIGN

Lyman Davidson Dooley, Inc.

1640 Powers Ferry Road
Building 1, Suite 100
Marietta, GA 30067

770.850.8494 t
770.850.8993 f

lddi-architects.com

ATLANTA
NASHVILLE
TAMPA
FT. COLLINS

REV.
REV.
REV.
REV.

NORTHPARK WALK
COUNTY LINE ROAD
RIDGELAND, MS

NORTHPARK WALK

COUNTY LINE ROAD
RIDGELNAD, MS

DAN TUCKER
COLLINS GOODMAN

1447 PEACHTREE ST, NE
SUITE 525
ATLANTA, GEORGIA 30309

TITLE: DETAILS AND SECTIONS
FILE:
JOB: 105081.00
QC CTRL: MKW
DRAWN: MFN
S 301
REV. DATE: 12/19/05