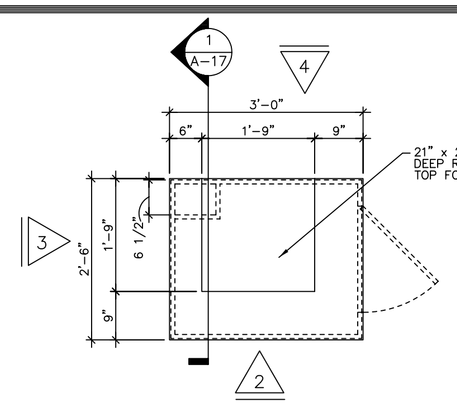

CASHIER #3 PLAN
SCALE: 3/4" = 1'-0"

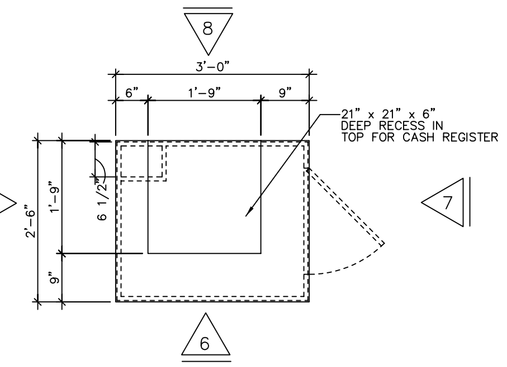

CASHIER #1 & #2 PLAN
SCALE: 3/4" = 1'-0"

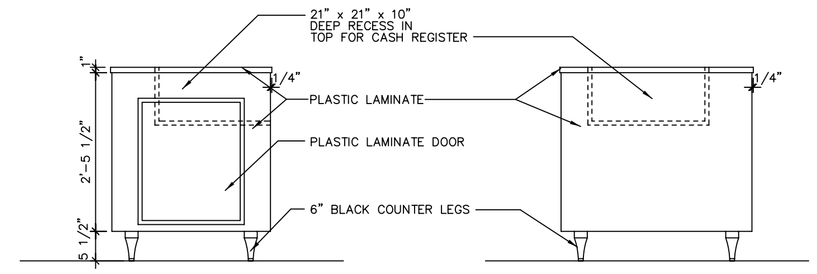

1 CASHIER ELEVATION
SCALE: 3/4" = 1'-0"

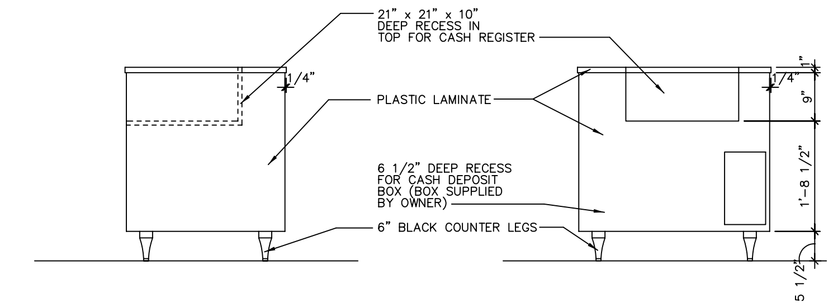

2 CASHIER ELEVATION
SCALE: 3/4" = 1'-0"

3 CASHIER ELEVATION
SCALE: 3/4" = 1'-0"

4 CASHIER ELEVATION
SCALE: 3/4" = 1'-0"

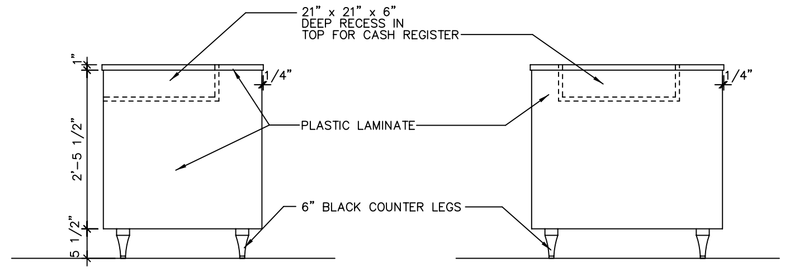

5 CASHIER ELEVATION
SCALE: 3/4" = 1'-0"

6 CASHIER ELEVATION
SCALE: 3/4" = 1'-0"

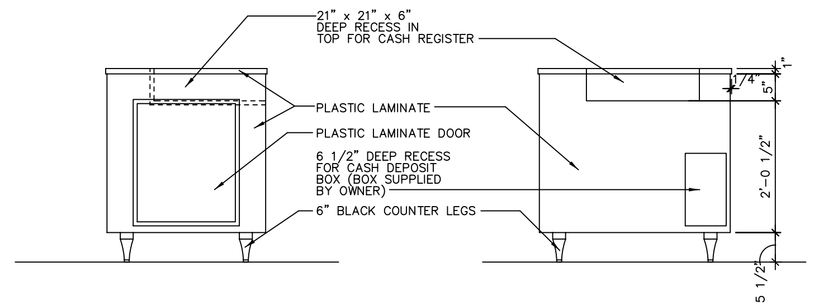

7 CASHIER ELEVATION
SCALE: 3/4" = 1'-0"

8 CASHIER ELEVATION
SCALE: 3/4" = 1'-0"

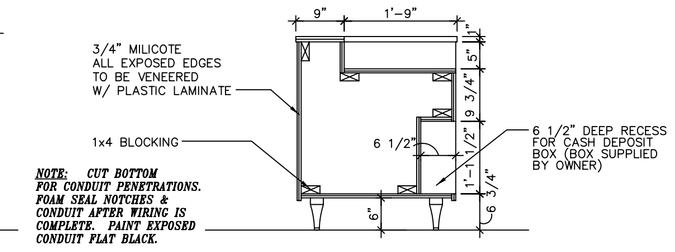

NOTE: CUT BOTTOM FOR CONDUIT PENETRATIONS. FOAM SEAL NOTCHES & CONDUIT AFTER WIRING IS COMPLETE. PAINT EXPOSED CONDUIT FLAT BLACK.

1 A-1 CASHIER SECTION
SCALE: 3/4" = 1'-0"

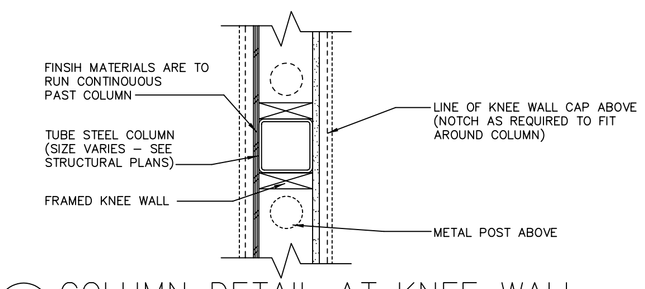

7 A-1 COLUMN DETAIL AT KNEE WALL
SCALE 1-1/2" = 1'-0"

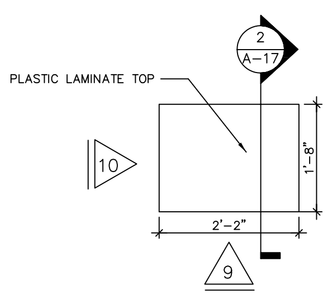

BROOM CLOSET PLAN
SCALE: 3/4" = 1'-0"

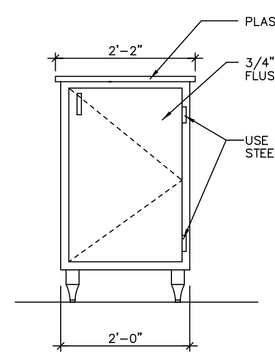

9 BROOM CLOSET ELEV.
SCALE: 3/4" = 1'-0"

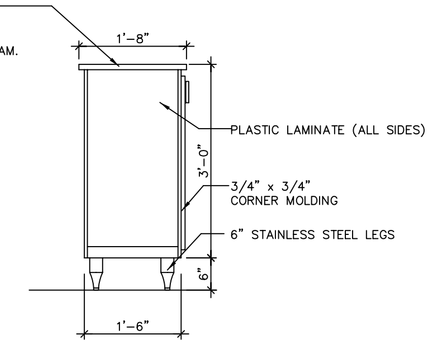

10 BROOM CLOSET ELEV.
SCALE: 3/4" = 1'-0"

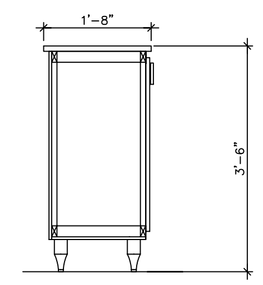

2 A-1 BROOM CLOSET SECTION
SCALE: 3/4" = 1'-0"

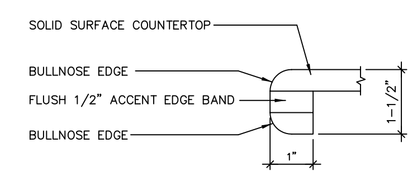

SOLID SURFACE COUNTERTOP
6 A-1 EDGE DETAIL
SCALE: 6" = 1' – 0"

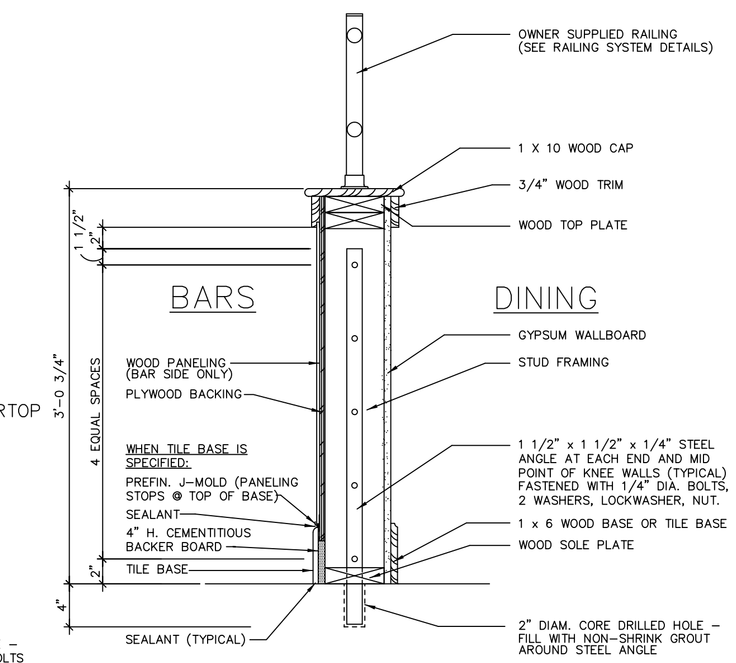

5 A-1 KNEE WALL SECTION
SCALE 1-1/2" = 1'-0"

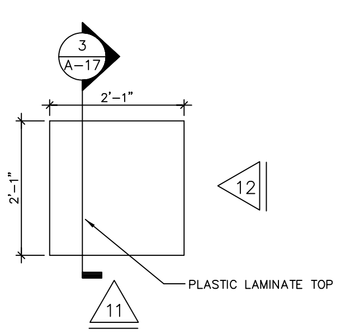

MINT STAND PLAN
SCALE: 3/4" = 1'-0"

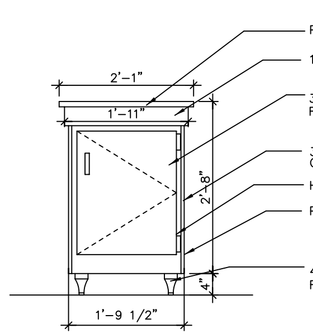

11 MINT STAND ELEV.
SCALE: 3/4" = 1'-0"

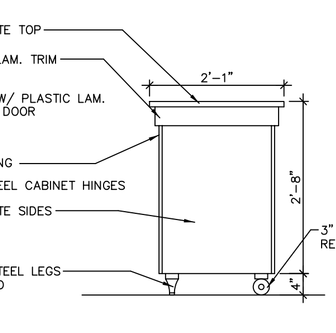

12 MINT STAND ELEV.
SCALE: 3/4" = 1'-0"

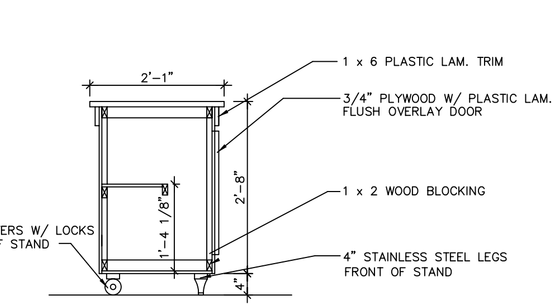

3 A-1 MINT STAND SECTION
SCALE: 3/4" = 1'-0"

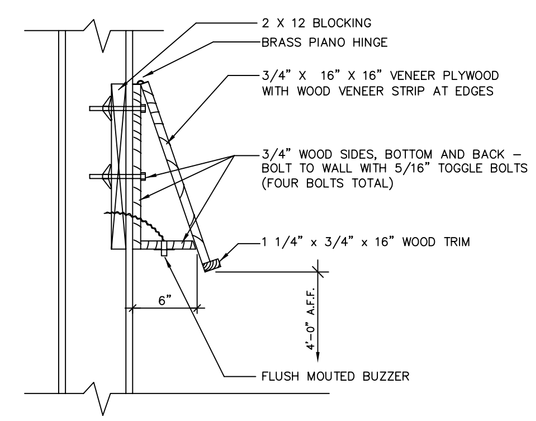

4 A-1 PAD HOLDER SECTION
SCALE: 1 1/2" = 1'-0"

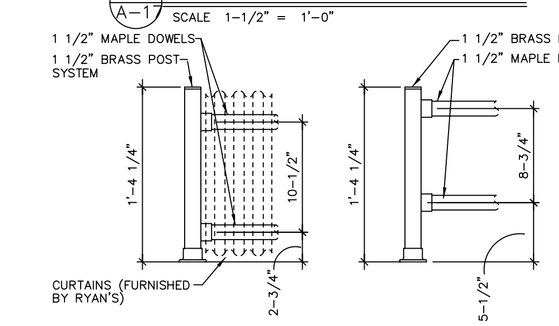

@ CURTAINS @ FOOD BARS & ENTRY

8 A-1 BRASS RAILING SYSTEM
SCALE 1-1/2" = 1'-0"

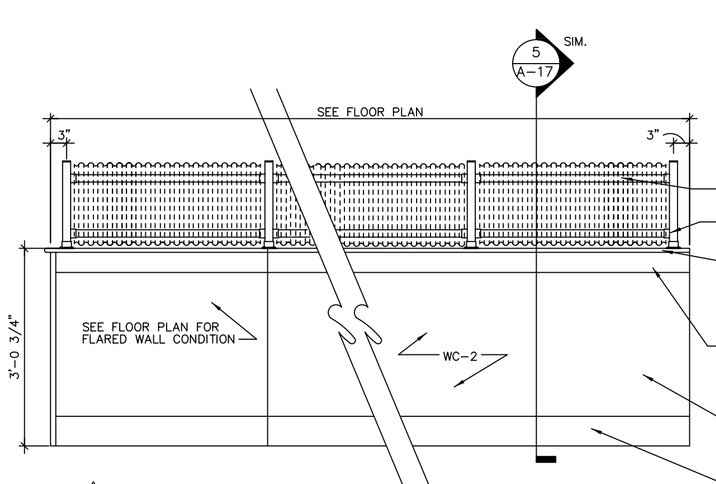

77 KNEE WALL & RAILING ELEVATION
SCALE: 3/4" = 1'-0"

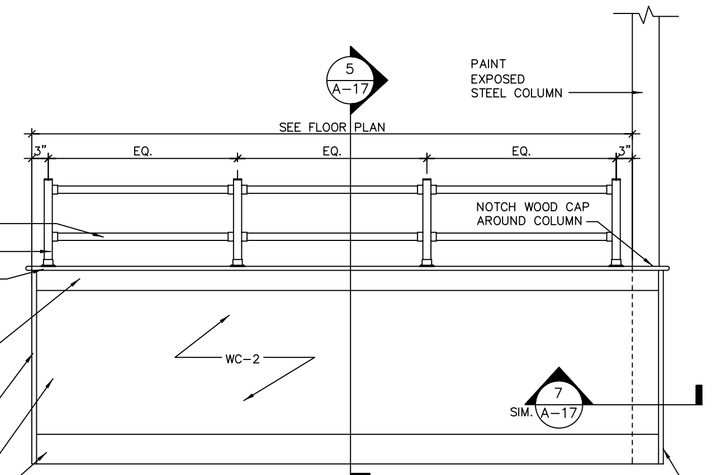

78 KNEE WALL & RAILING ELEVATION
SCALE: 3/4" = 1'-0"

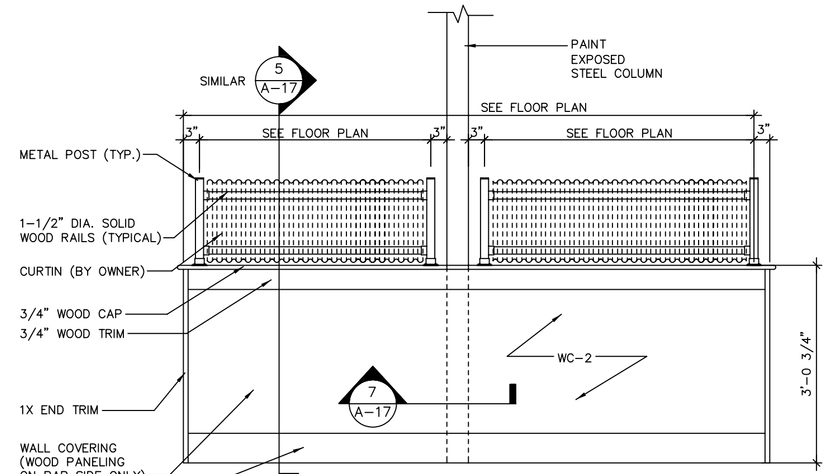

80 KNEE WALL & RAILING ELEVATION
SCALE: 3/4" = 1'-0"

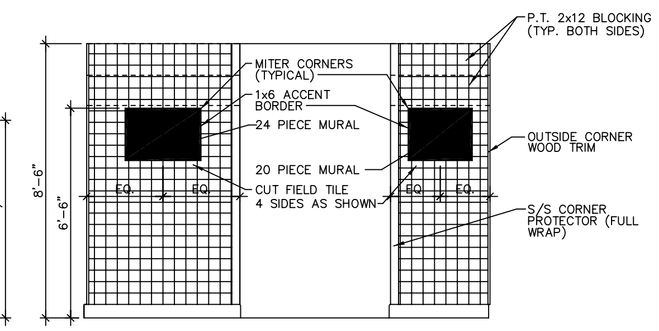

81 LEFT HAND DINING
BAKERY BAR
SCALE: 3/8" = 1'-0"

NOTE: USE WHITE GROUT @ MURAL AND ACCENT TILES ONLY

copyright © 1999

GENERAL NOTES :

1. EXPOSED EDGES OF PLYWOOD AND OAK TRIM TO BE STAINED. (FOLLOW FINISH SCHEDULE AND SPECIFICATIONS)
2. FOLLOW FINISH SCHEDULE IN SPECIFICATIONS FOR COUNTERTOP, PANELING, STAIN, AND TILE SELECTIONS.
3. INTERIOR PLYWOOD TO BE 15/32" UNLESS NOTED OTHERWISE.

REVISIONS

REV.	DESCRIPTION	DATE	BY
A.			R.A.D.

RYAN'S FAMILY STEAK HOUSES, INC.
199 HUNT ST. GREER, S.C. 29650 (864) 879-1000

Ryan's® FAMILY STEAK HOUSE

INTERIOR CASEWORK DETAILS

DESIGNED: R.A.D. DATE: 07-09-99

STORE NO. PT9L

DRAWING NO. A-17