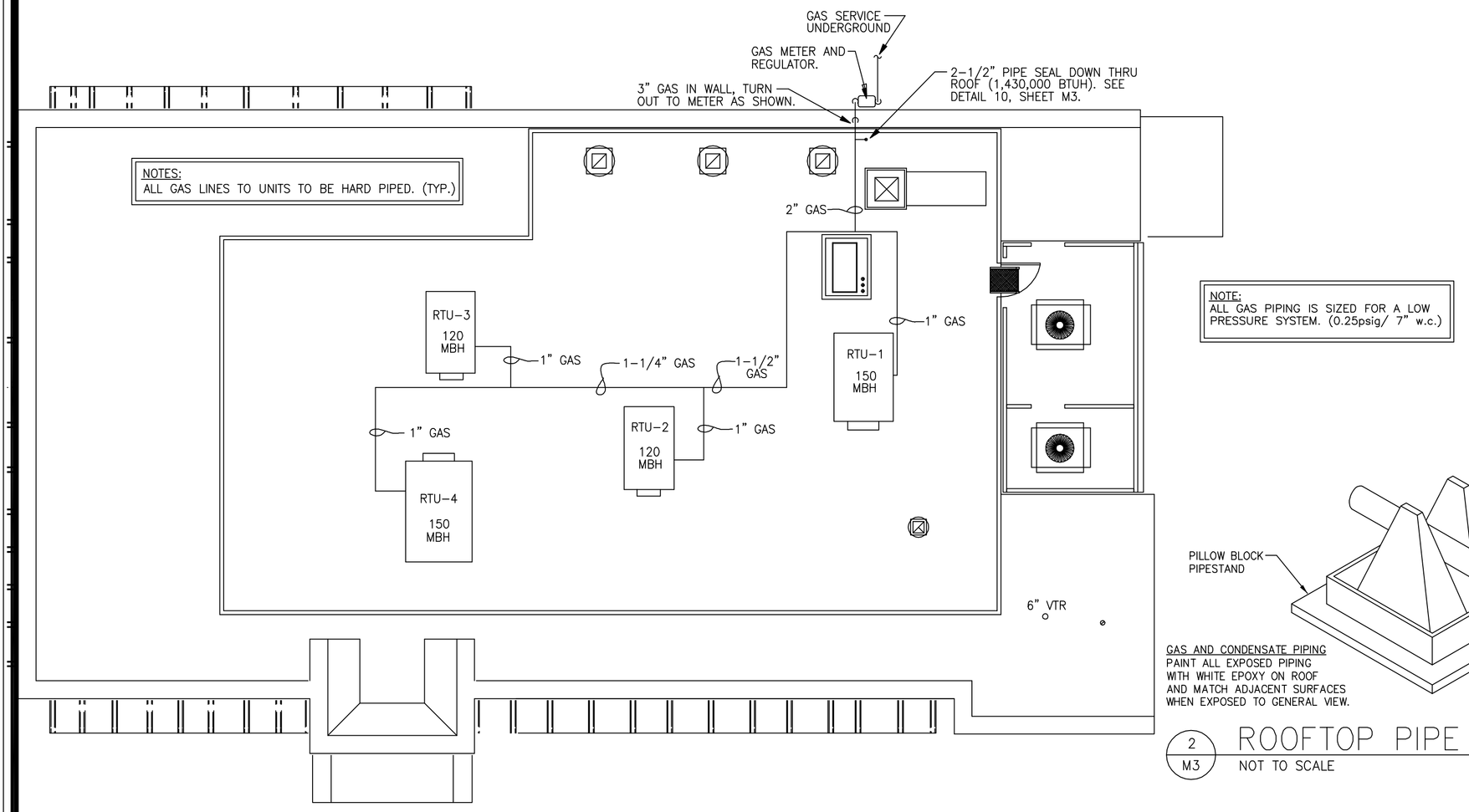

NOTE:
ALL GAS PIPING IS SIZED FOR A LOW PRESSURE SYSTEM. (0.25psig/ 7" w.c.)

3 P3 PLUMBING ROOF PLAN
SCALE: 1/8" = 1'-0"

ITEM	DESCRIPTION	CW	HW	TW	AFF	DW	IW	GAS	BTUh	AFF
3112	DOUBLE CONVECTION OVEN							s"	120,000	24"
3121	36" GAS GRIDDLE							s"	180,000	24"
3123	60" GAS GRIDDLE							s"	150,000	24"
3152	GAS FRYER – TRIPLE							1"	420,000	24"
3160	GAS HOT PLATE							s"	40,000	24"
3172	FOOD WARMER						1"			
3231	ICE MACHINE	i"			96"		1"			
3242	SALAD BAR						1"			
3306	DIPPER WELL		i"		18"		1"			
3307	PRE-RINSE SINK	i"	i"		8"		2"			
3308	DISHMACHINE		s"		60"		2"			
3310	BOOSTER HEATER		s"		12"					
3312	HAND SINK	i"		i"	20"	1i"				
3337	CARBONATOR	s"			42"					

ITEM	DESCRIPTION	CW	HW	TW	AFF	DW	IW
3402	COFFEE/TEA BREWER		i"				
3405	BEVERAGE DISPENSER	i"			12"		2"
3509	BLENDER STATION	i"	i"		12"		1i"
3512	48" COCKTAIL STATION	i"	i"		12"		1i"
3520	3-COMP. BAR SINK	i"	i"		12"		1i"
3521	12" HAND SINK	i"		i"	12"		1i"
3545	BEER TOWER W/DRAIN						1i"
3550	FROZEN DRINK MACHINE						1"
3566	DRAINBOARD						1"
3774	DISH TABLE	i"	i"		8"		2"
3843	3-COMP SINK	i"	i"		8"		2"
3850	3-COMP SINK	i"	i"		8"		2"
3916	DRINK TROUGH						1"
3936	GLASS RACK						1"

VERIFY PLUMBING REQUIREMENTS AND ROUGH-IN DIMENSIONS WITH FINAL EQUIPMENT SELECTION.
COORDINATE WITH KITCHEN EQUIPMENT SUPPLIER PRIOR TO INSTALLATION.

6 P3 KITCHEN EQUIPMENT PLUMBING SCHEDULE
NOT TO SCALE

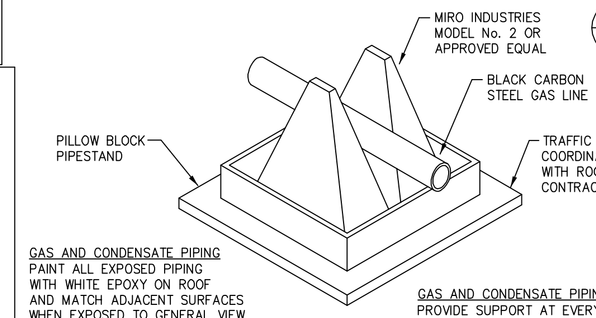

2 M3 ROOFTOP PIPE SUPPORT DETAIL
NOT TO SCALE

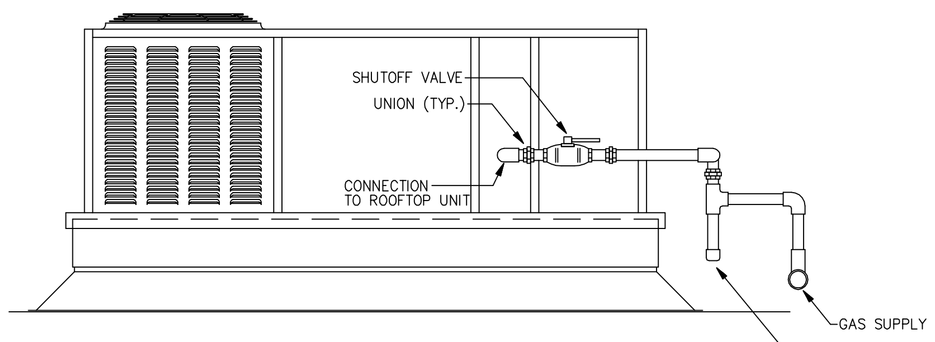

1 M3 RTU GAS PIPING DETAIL
NOT TO SCALE

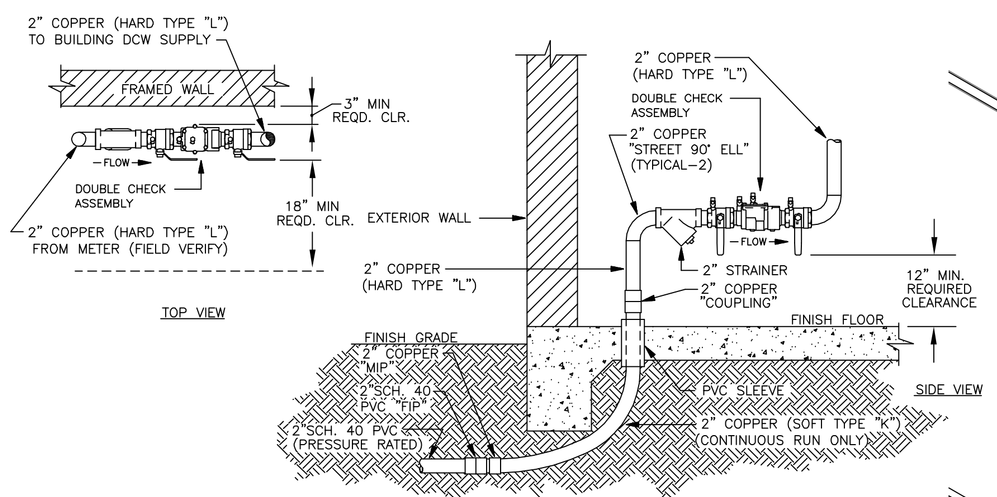

4 P3 MECHANICAL ROOM WATER SERVICE ENTRANCE DETAIL
NOT TO SCALE

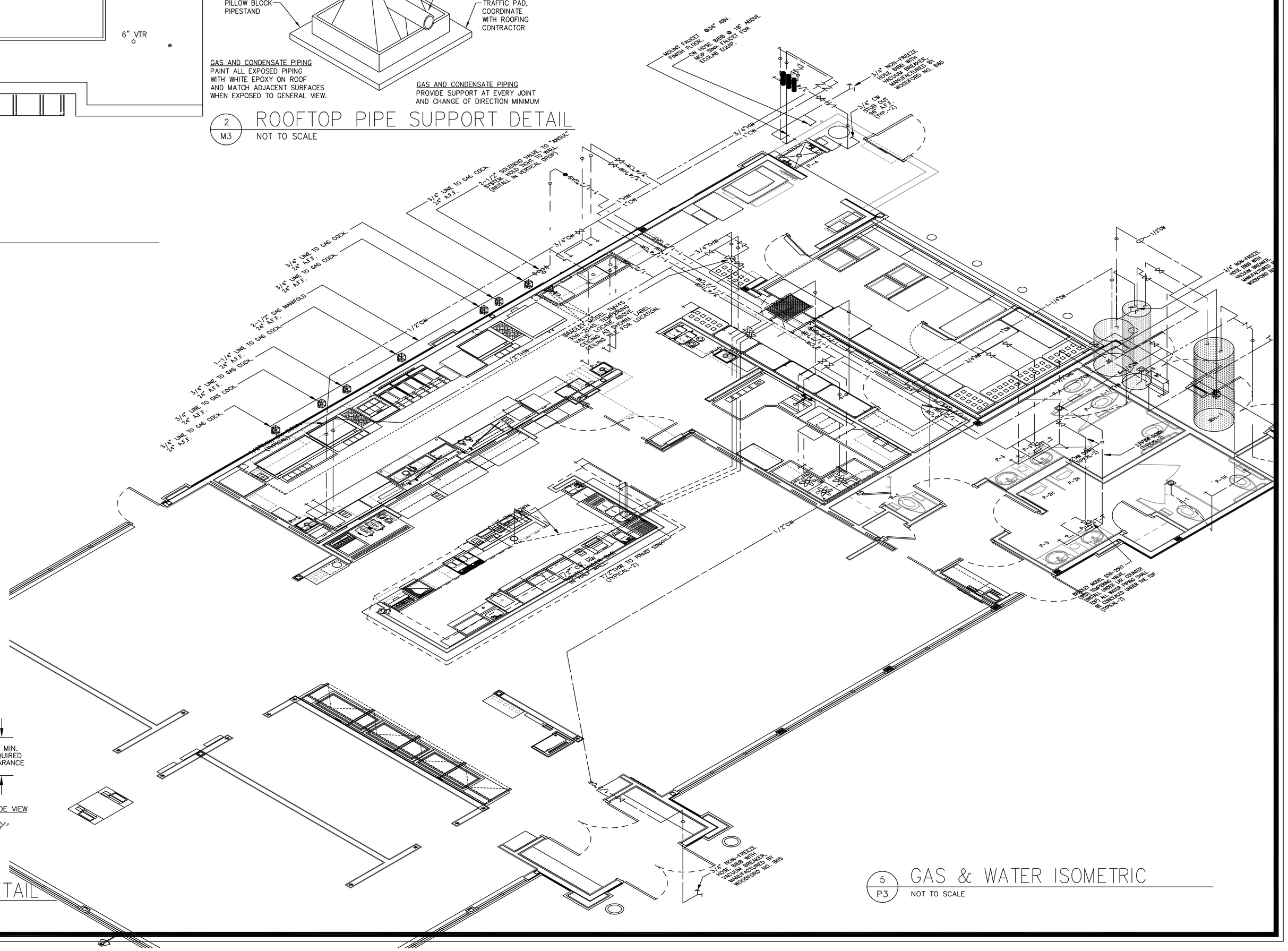

5 P3 GAS & WATER ISOMETRIC
NOT TO SCALE

MARK	REVISION	DATE
1	DW/BOOSTER HEATER	9/29/05

ENGINEER
Kurzynske & Associates
825 Third Avenue, South
Nashville, Tennessee 37210
(615) 242-3210

SEAL
STATE OF LOUISIANA
MARK T. KURZYNSKE
License No. 28667
REGISTERED PROFESSIONAL ENGINEER
9/29/05

PLUMBING GAS AND WATER ISOMETRIC

RUBY TUESDAY # 4 (Ruby House)
I-10E SERVICE ROAD at TYLER DRIVE (I-10 at Cause)
SLIDELL LOUISIANA

K&A PROJECT NUMBER
RT0522
ISSUE FOR REVIEW
JULY 22, 2005
ISSUE FOR CONSTRUCTION
.
CHECKED BY
.
SCALE
SHEET NUMBER
P-3