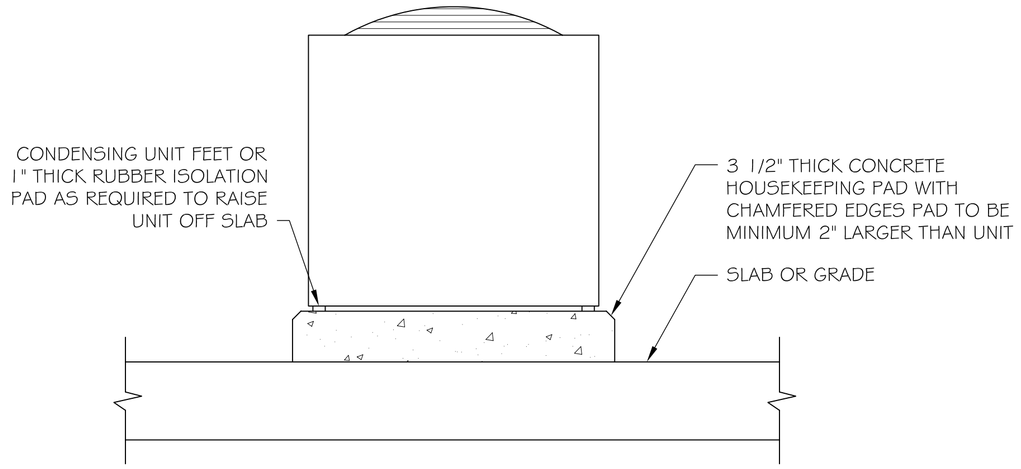

CONDENSING MOUNTING DETAIL
N.T.S.

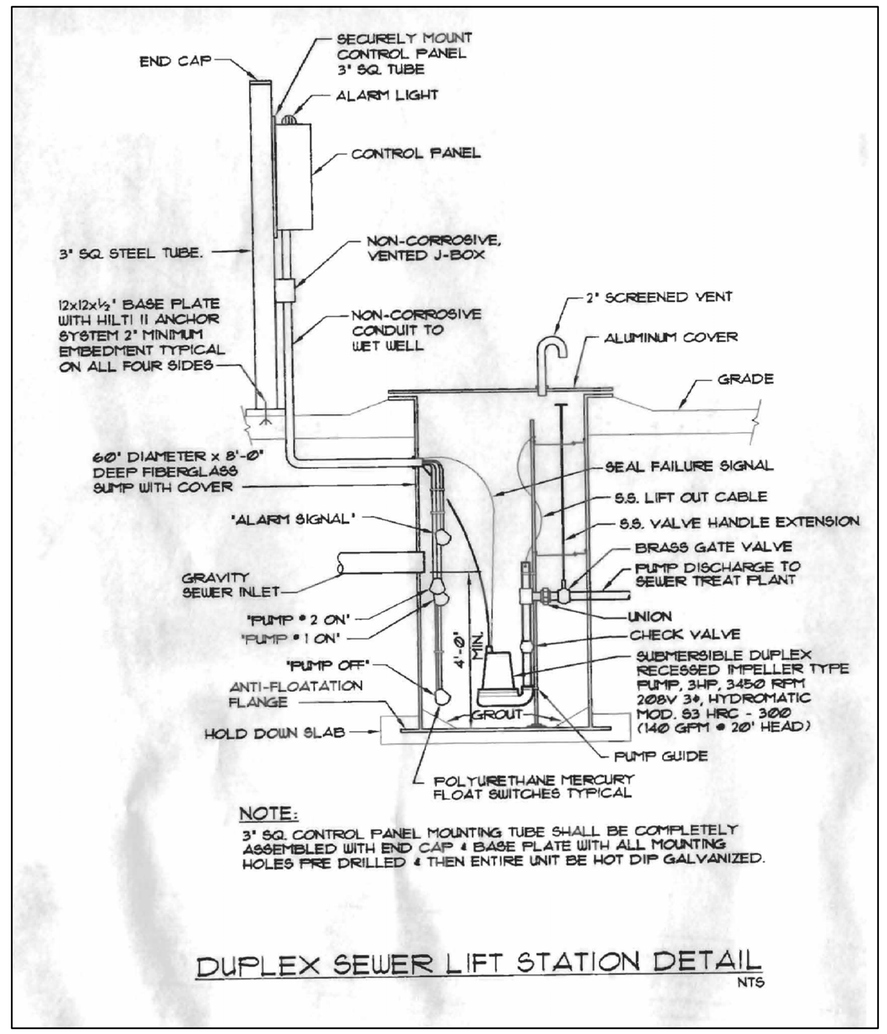

DUPLEX SEWER LIFT STATION DETAIL
NTS

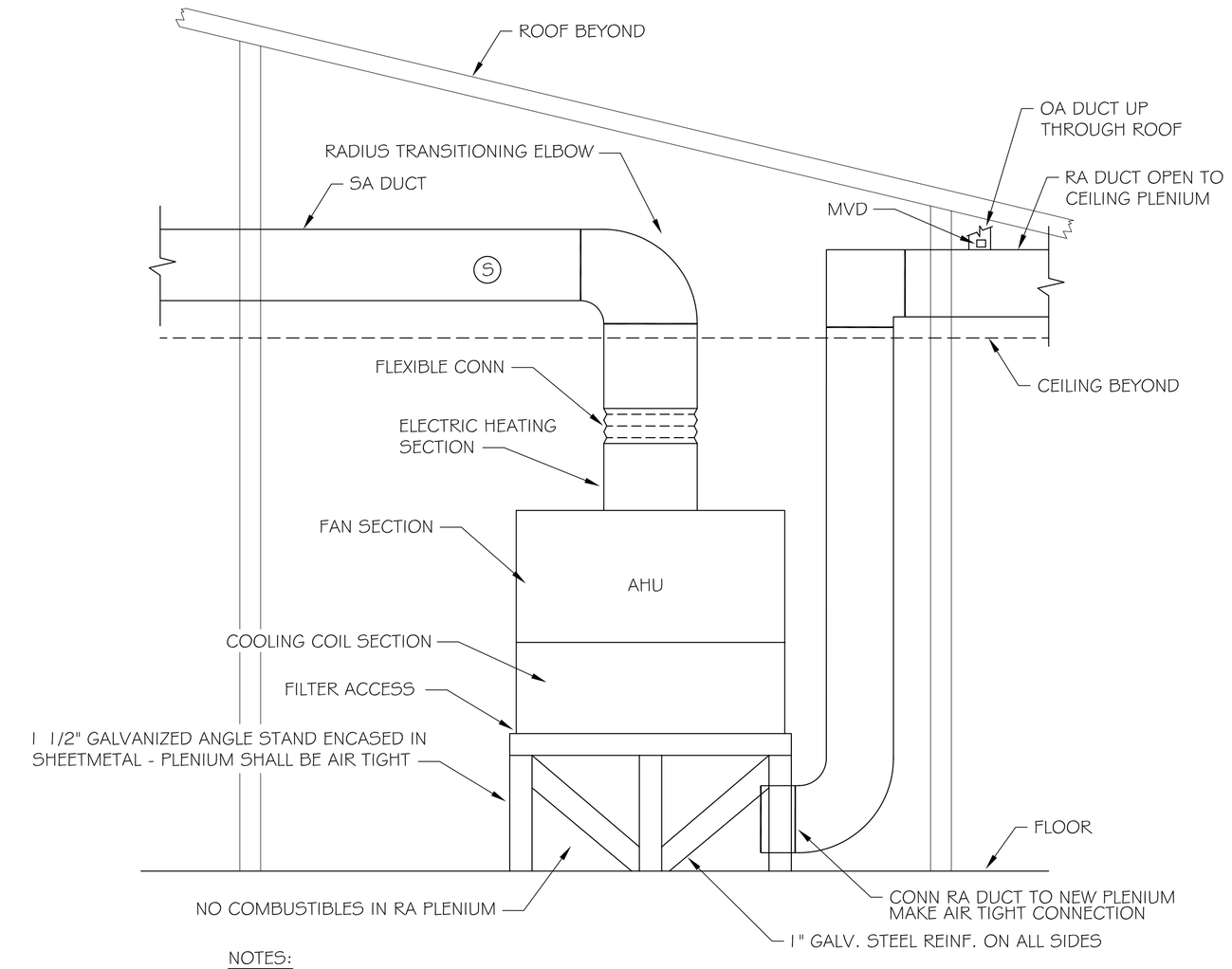

NOTES:
1. ON UNITS UNDER 5 TONS PROVIDE FIRESTAT IN THE RETURN AIR WIRED TO SHUT DOWN THE UNIT WHEN TEMPERATURE IS EXCEEDED.
2. ON UNITS 5 TONS AND LARGER, PROVIDE A SMOKE DETECTOR IN THE SUPPLY AND THE RETURN AIR DUCTS WIRED TO SHUT DOWN THE UNIT WHEN SMOKE IS DETECTED. THE SMOKE DETECTOR IN THE RETURN AIR DUCT MAY BE ELIMINATED IF CONTRACTOR RECEIVES APPROVAL FROM THE LOCAL AUTHORITY HAVING JURISDICTION.

AIR HANDLING UNIT INSTALLATION DETAIL
N.T.S.

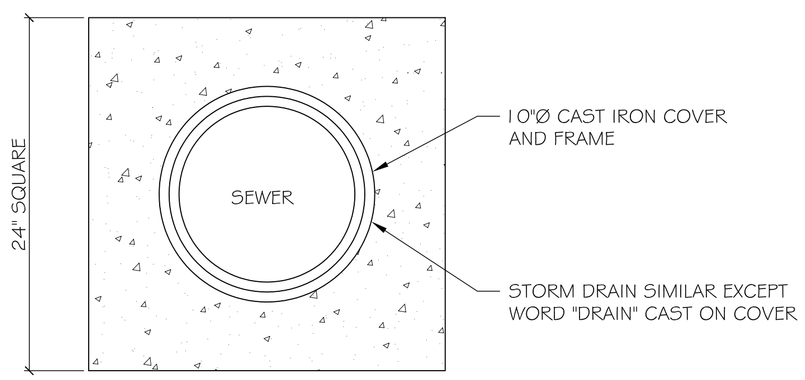

PLAN VIEW

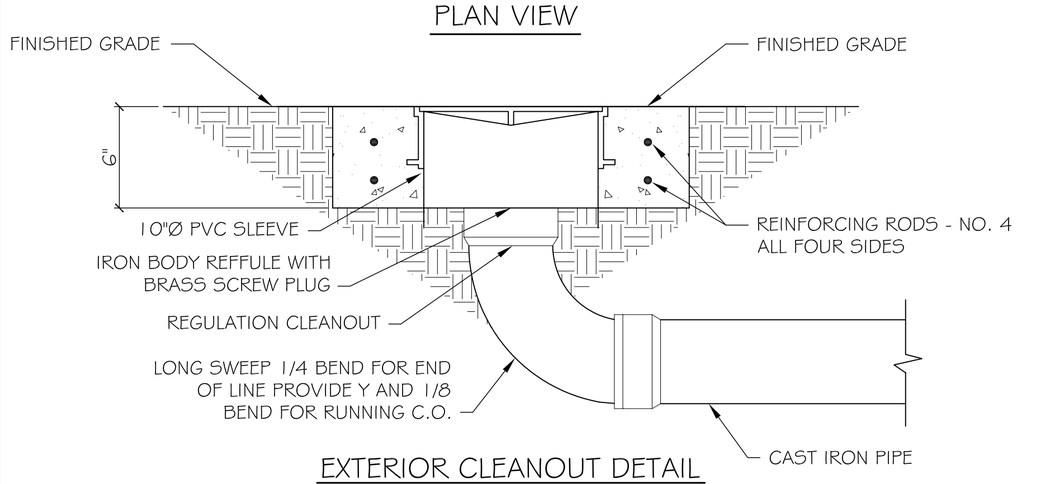

EXTERIOR CLEANOUT DETAIL
N.T.S.

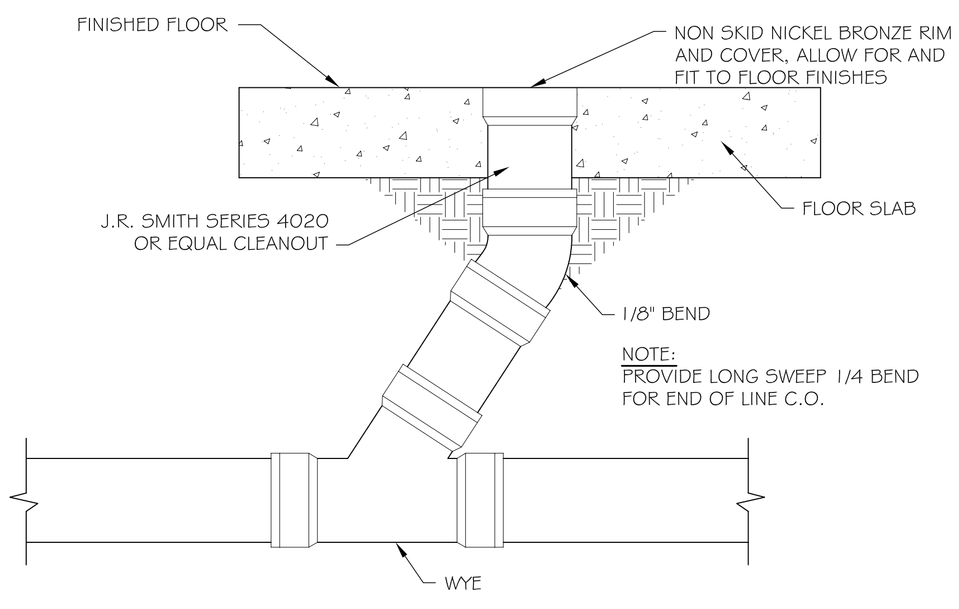

INTERIOR CLEANOUT DETAIL
N.T.S.

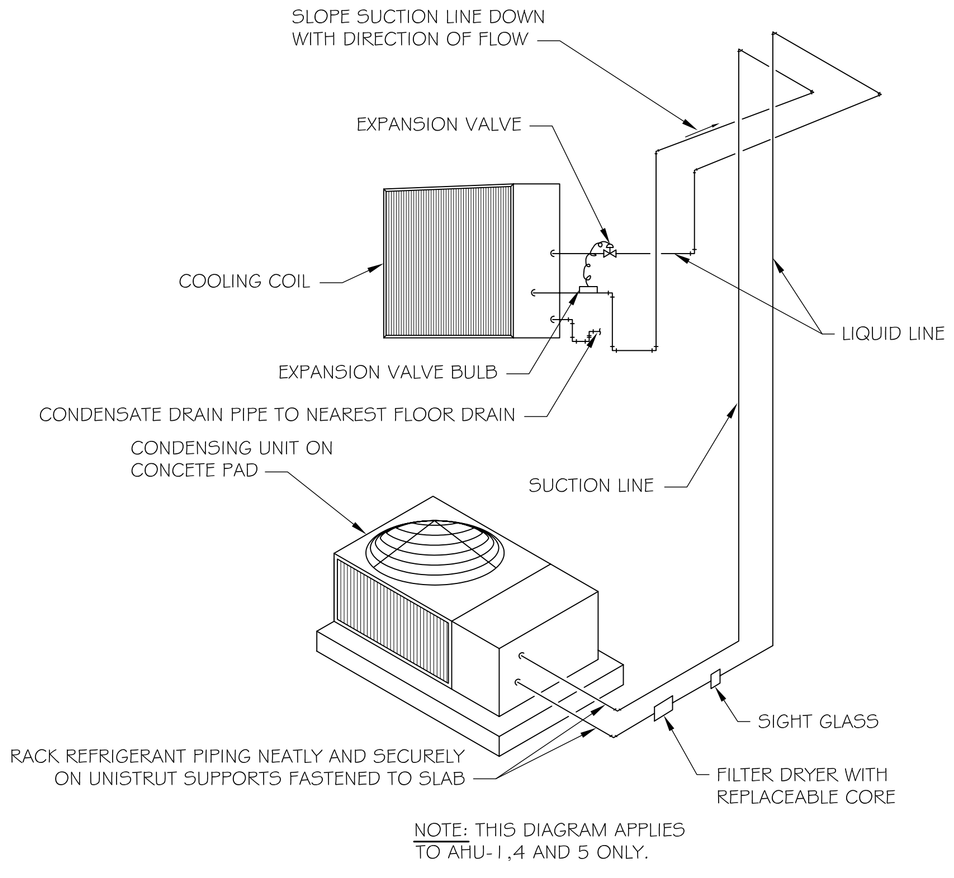

REFIGERANT PIPING DIAGRAM
N.T.S.

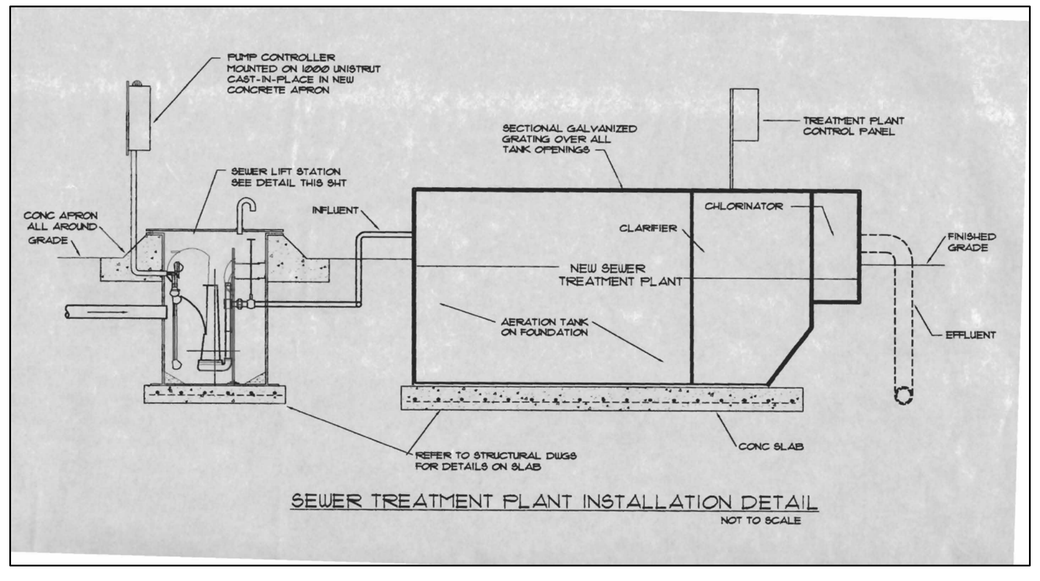

SEWER TREATMENT PLANT INSTALLATION DETAIL
NOT TO SCALE

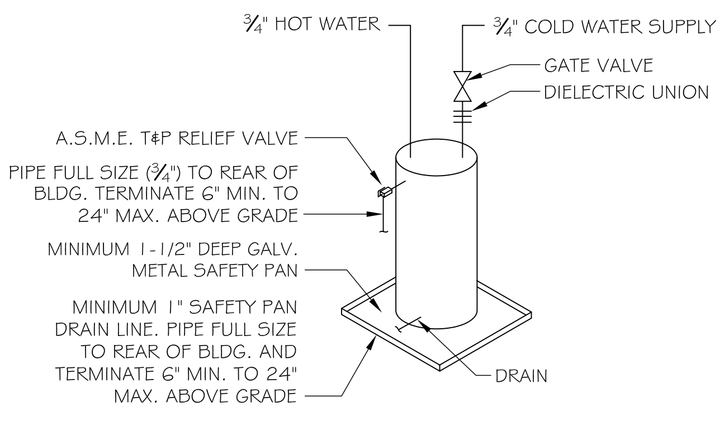

TYPICAL WATER HEATER
N.T.S.

DAMMON
ENGINEERING, INC.

CHIEF ENGINEER
EMMETT
DAMMON, P.E.

CHIEF ARCHITECT
ROBERT
WILTSE

1095 FLORIDA AVENUE
SLIDELL, LA. 70458
OFFICE: 985-649-5832
FAX: 985-641-5950

WEBSITE:
WWW.DAMMONENGINEERING.COM

EMAIL:
DAMMONENG@BELLSOUTH.NET

ARCHITECTURE

ENGINEERING

STUDIES

PLANNING

INVESTIGATION

EXPERT WITNESS

NEW OFFICE COMPLEX

CHILD DEVELOPMENT COUNCIL OF ACADIANA, INC.
OPELOUSAS, LA

MECHANICAL DETAILS

REV: 12-7-09 CONST.

SCALE: AS NOTED

JOB#: 2030

DATE: 10-19-09

SHEET 19

M-2

OF 26