M-K ENGINEERING, INC.
CONSULTING ENGINEERS
HVAC-PLUMBING-FIRE PROTECTION-ELECTRICAL
4323 DIVISION STREET, SUITE 211
METAIRIE, LOUISIANA 70002
TEL.(504)887-2376, FAX(504) 887-2302

REVISIONS	BY

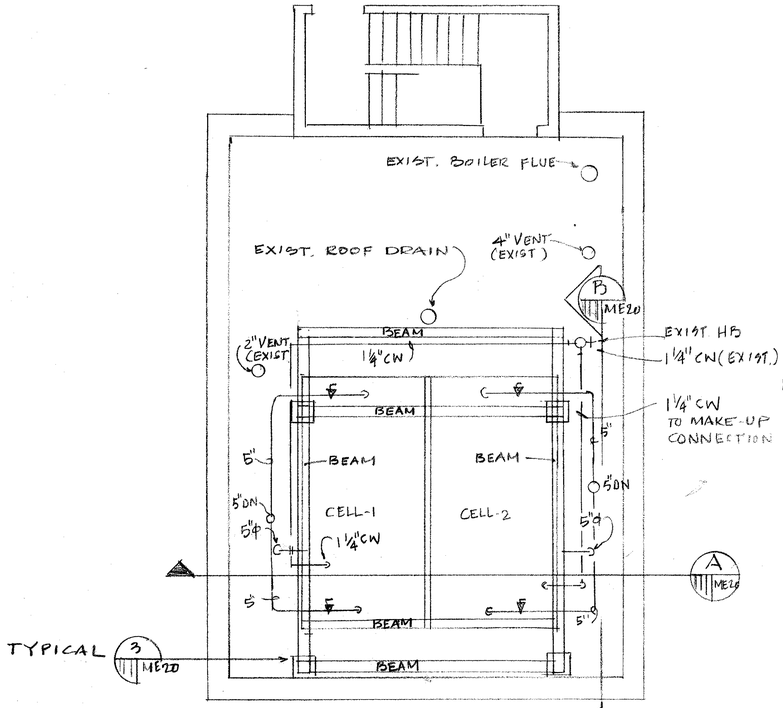

1 ME20 COOLING TOWER ROOF PLAN - MECH.
SCALE: ¼"=1'-0"

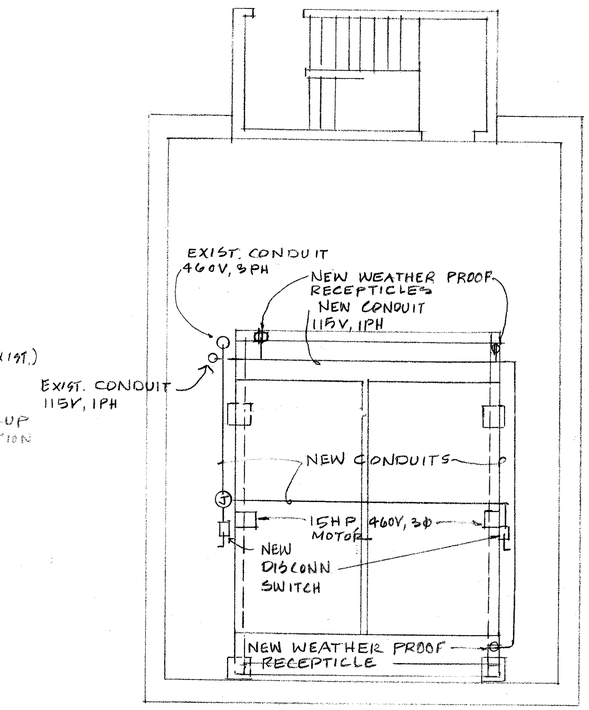

2 ME20 COOLING TOWER ROOF PLAN - ELECT
SCALE: ¼"=1'-0"

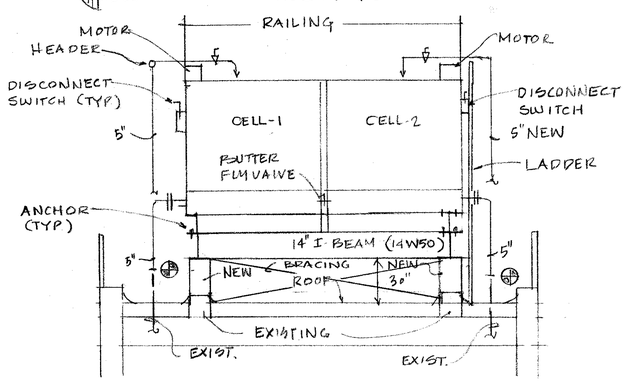

SECTION A ME20
SCALE: ¼"=1'-0"

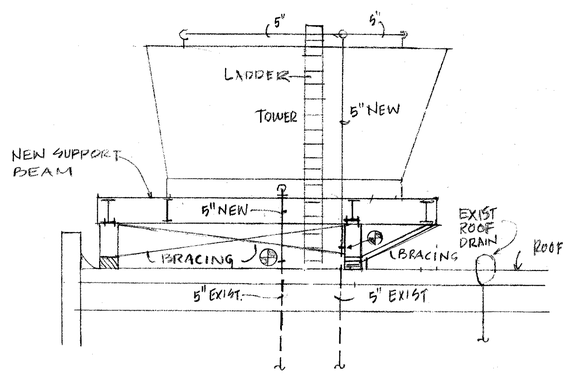

SECTION B ME20
SCALE ¼"=1'-0"

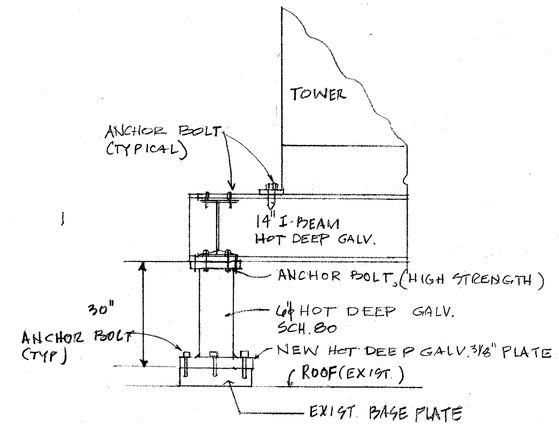

3 ME20 DETAIL
N.T.S

NOTES:

1. ALL NEW COOLING TOWER SUPPORTS SHALL BE HOT DEEP GALV. STEEL
2. CONTRACTOR PREPARE SHOP DRAWINGS FOR COOLING TOWER SUPPORTS FOR ARCH.'S REVIEW AND APPROVAL.
3. REMOVE ALL EXIST. TOWER AND SUPPORTS.
4. VERIFY EXIST. LOCATION OF SUPPORT POINTS ON ROOF AND FABRICATE NEW STEEL ACCORDINGLY.
5. PROVIDE 1" Φ ROD TO CROSS BRACE ALL DIRECTIONS.
6. ELECTRICAL CONDUITS, RECEPTICLES, ETC TO BE REMOVED AND RE-INSTALL NEW AFTER STRUCTURAL SUPPORTS REPLACED.
7. COOLING TOWER CONTROL MUST BE RECONNECTED AFTER REPLACE IT.
8. COOLING TOWER REPLACEMENT IS AN ALTERNATE. SEE SPEC. FOR NUMBER.

STATE OF LOUISIANA
MAGAN K. KANSAGRA
REG. No. 20491
REGISTERED PROFESSIONAL ENGINEER
MECHANICAL ENGINEERING

CONSULTANT
BYRON J. STEWART & ASSOC.
ARCHITECTS & PLANNERS
2300 MARENGO ST.
NEW ORLEANS, LA 70115
(504) 897-5339

CLIENT
NEW ORLEANS PARISH SCHOOL BOARD
4300 ALMONASTER AVE.
NEW ORLEANS, LA.

PROJECT
CARTER G. WOODSON MIDDLE SCHOOL
RE-ROOFING & MECHANICAL REPAIRS

DRAWN	JV
CHECKED	MK
DATE	4-21-97
SCALE	AS NOTED
JOB NO.	
SHEET	ME-20
OF	22 SHEETS

NATIONAL PRINTFIRST NO. 286AG-8-24X36