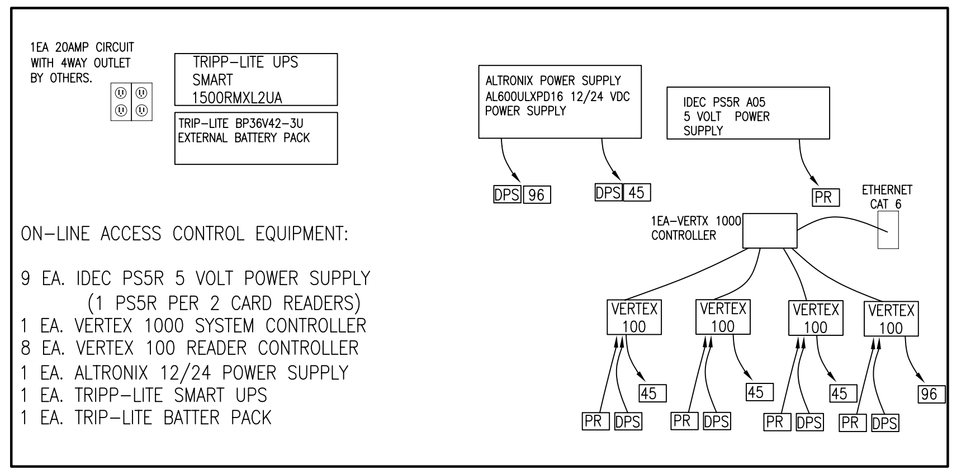

ON-LINE ACCESS CONTROL EQUIPMENT:

9 EA. IDEC PS5R 5 VOLT POWER SUPPLY
(1 PS5R PER 2 CARD READERS)
1 EA. VERTEX 1000 SYSTEM CONTROLLER
8 EA. VERTEX 100 READER CONTROLLER
1 EA. ALTRONIX 12/24 POWER SUPPLY
1 EA. TRIPP-LITE SMART UPS
1 EA. TRIP-LITE BATTER PACK

LEARNING CENTER
ON-LINE ACCESS CONTROL CLOSET ELEVATION
N.T.S.

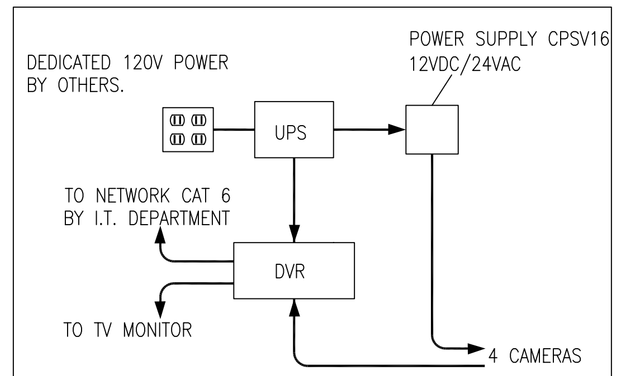

TYPICAL EQUIPMENT ELEVATION IN SECURITY CLOSET
N.T.S.

TOTAL PIECES OF VIDEO EQUIPMENT IN CLOSET:

1 EA. DVRs
1 EA. CPSV16 P.S.
1 EA. UPS(SAME UNIT AS ACCESS CONTROL)
1 EA. VIDEO MONITOR

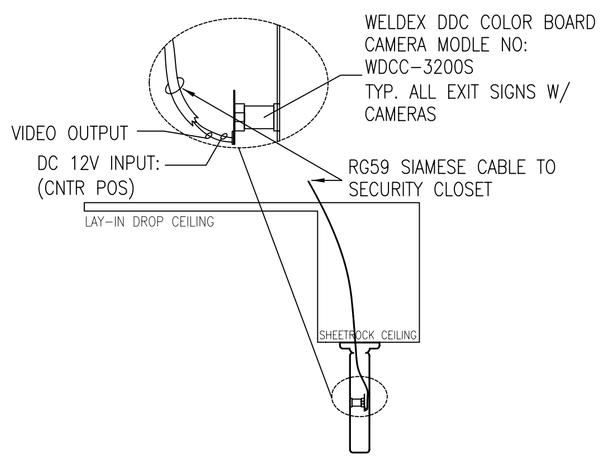

(A) EXIT SIGN W / SINGLE CAMERA FRONT MOUNTED
N.T.S.

NOTE:
ALL PENETRATIONS OF FIRE PARTITIONS SHALL BE FIRE CAULKED. (PENETRATIONS THROUGH RATED CONSTRUCTION SHALL BE SEALED WITH A MATERIAL CAPABLE OF PREVENTING THE PASSAGE OF FLAMES AND HOT GASES WHEN TESTED IN ACCORDANCE WITH ASTM-E814.)
ALL CORRIDOR WALLS ARE SMOKE RATED AND ALL PENETRATIONS IN CORRIDOR WALLS MUST BE SEALED TO PREVENT THE PASSAGE OF SMOKE.

NOTE: ELECTRICAL CONTRACTOR SHALL COORDINATE SECURITY REQUIREMENTS WITH THE GENERAL CONTRACTOR.

LEGEND

- PR = PERSONA W644 MAG SWIPE READER
- OL = PERSONA OFF-LINE LOCK
- MS = VISONIC DA-5 MOTION SENSOR
- DPS = SS DOOR POSITION SWITCH
- 96 = HES 9600 ELECTRIC STRIKE
- 45 = HES 4500 ELECTRIC STRIKE
- PD = PUSH BUTTON (BY OTHERS)
- PD = POWER DOOR OPERATOR (BY OTHERS)
- J = JUNCTION BOX BY OTHERS.
- A = WELDEX EXIT SIGN W/COVERT CAMERAS MODEL – WDE-600C (SINGLE)
- 120V, 20A QUAD DUPLEX RECEPTACLE BY OTHERS

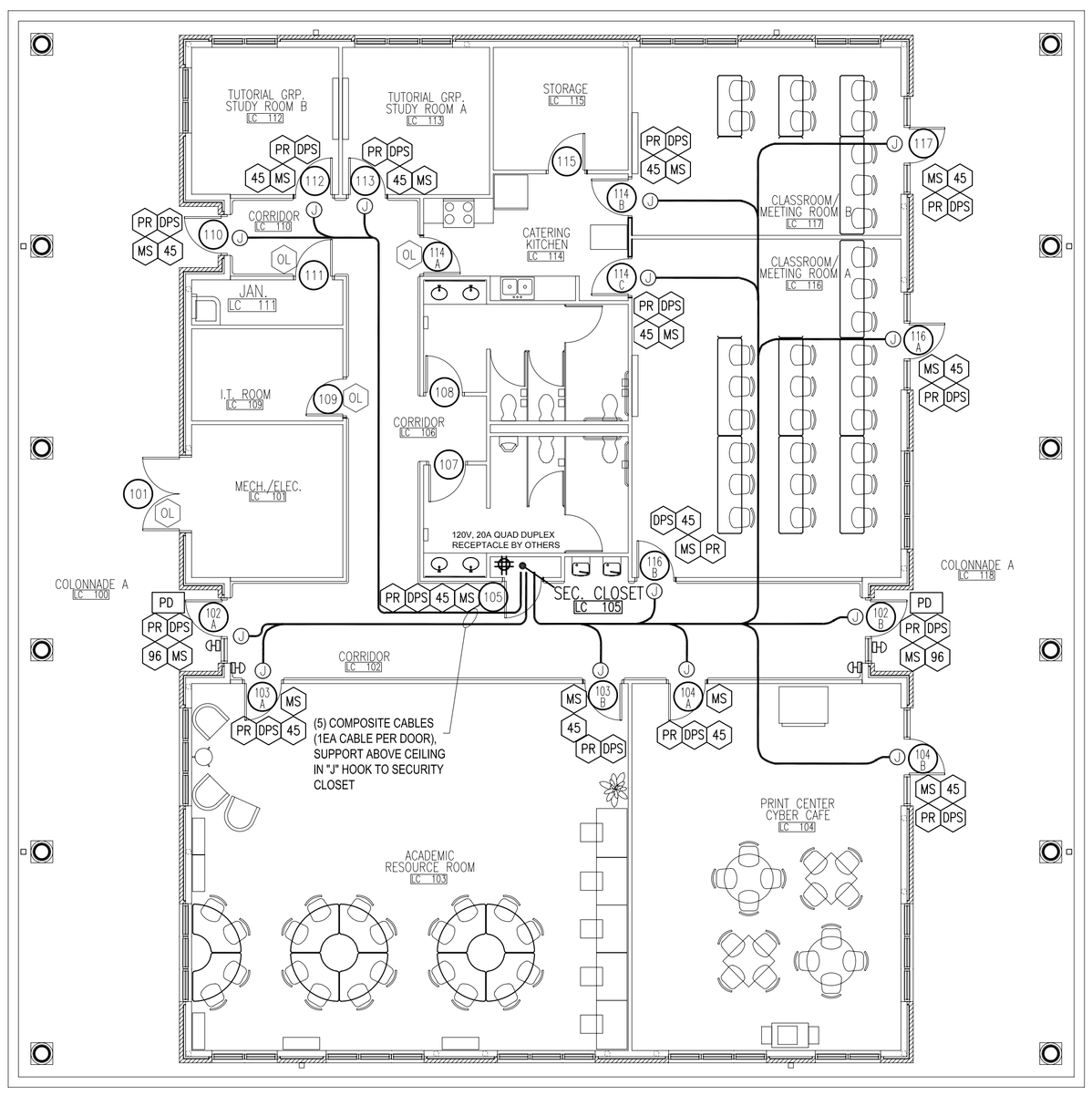

LEARNING CENTER ON/OFF LINE ACCESS CONTROL & CABLE LAYOUT
SCALE: ⅛" = 1'-0"

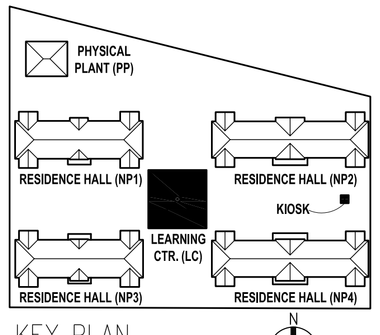

KEY PLAN
NTS

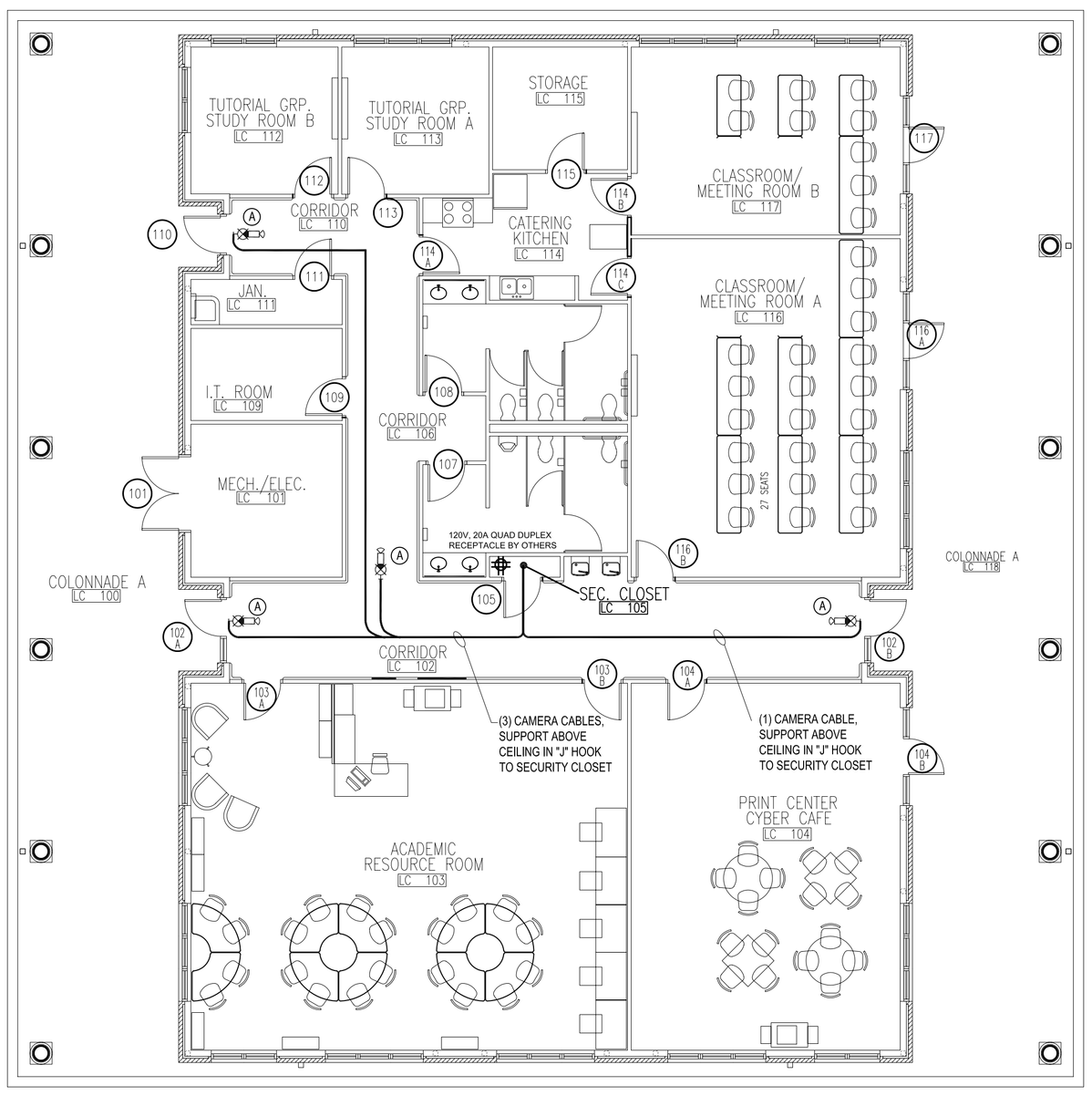

LEARNING CENTER CAMERA LOCATION & CABLE LAYOUT
SCALE: ⅛" = 1'-0"

DAMMON ENGINEERING, INC.
EMMETT DAMMON

ARCHITECT
ROBERT WILTSE

1095 FLORIDA AVENUE
SLIDELL, LA. 70458
985-649-5832

WEBSITE:
WWW.DAMMONENGINEERING.COM

EMAIL:
DAMMONENG@BELLSOUTH.NET

ARCHITECTURE
ENGINEERING
STUDIES
PLANNING
INVESTIGATION
EXPERT WITNESS

CENTURY PARK UNIVERSITY OF SOUTHERN MISSISSIPPI

IDN-ACME INC.
1504 JUSTIN RD.
METAIRIE, LA 70001

LEARNING CENTER
SECURITY EQUIP & CABLE LAYOUT

REV: #1 10/30/09
#2 12/22/09
SCALE: AS NOTED
JOB#: 2028
DATE:6-29-2009
SHEET: 8

SEC 3-1

OF: 8