1 S4.00 TYPICAL BEAM CONNECTION SCHEDULE AND DETAIL

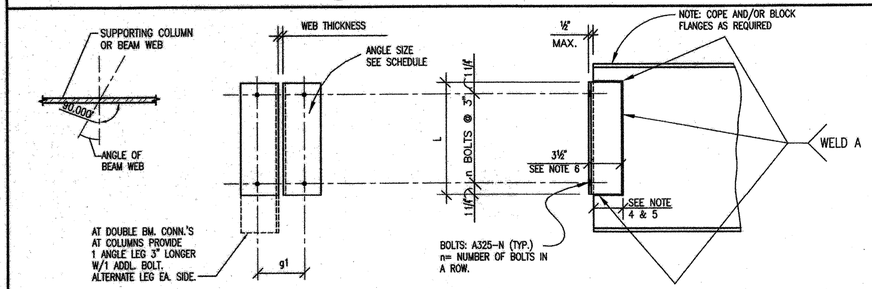

NOTES:

1. WHERE BEAMS AND GIRDERS FRAME INTO A W8 COLUMN OR THE WEB OF A W10 COLUMN, ANGLE SIZE 3X3XSAME THICKNESS SHALL BE USED AND g1 SHALL BE DECREASED 1½" TYPICALLY.
2. FOR CHANNEL CONNECTIONS, USE ANGLE AND BOLTS FOR SIMILAR DEPTH BEAM SHOWN BELOW.
3. FOR ANGLES 0° TO 14° FROM PERPENDICULAR, ANGLES SHALL BE BENT.
4. FOR ANGLES 14° TO 33.7° FROM PERPENDICULAR, PROVIDE 2 BENT PLATES ⅜"x AS REQ'D. BY GEOMETRY (PROVIDE MIN. 3" WELD).
5. FOR ANGLES 33.7° TO 71.6° FROM PERPENDICULAR, PROVIDE 1 BENT PLATE ⅜"x AS REQ'D. BY GEOMETRY (PROVIDE MIN. 3" WELD).
6. LEG SHALL BE ADJUSTED WHERE REQUIRED BY GEOMETRY.

	ANGLES 0° TO 33.7°						ANGLES 33.7° TO 71.6°	
BEAM SIZE	ANGLE SIZE	L in.	n	g1	WELD A	BOLT	L in.	n
W8'S & W10's	L4x3½x5/16	5½	2	5½	3/16	3/4"	5½	2
W12's	L4x3½x5/16	5½	2	5½	3/16	3/4"	8½	3
W14's	L4x3½x5/16	8½	3	5½	3/16	3/4"	11½	4
W16's	L4x3½x5/16	11½	4	5½	3/16	3/4"	11½	4
W18's	L4x3½x5/16	14½	5	5½	3/16	3/4"	14½	5
W21's	L4x3½x5/16	14½	6	5½	3/16	3/4"	17½	6
W24's	L4x3½x5/16	17½	7	5½	¼	3/4"	20½	7
W27's	L4x3½x5/16	20½	7	5½	¼	3/4"		
W30's	L4x3½x⅜	23½	8	5½	¼	3/4"		
W33's & W36's	L4x3½x⅜	26½	9	5½	5/16	3/4"		

2 S4.00 TYPICAL BEAM TO HSS COLUMN CONNECTION DETAIL AND SCHEDULE

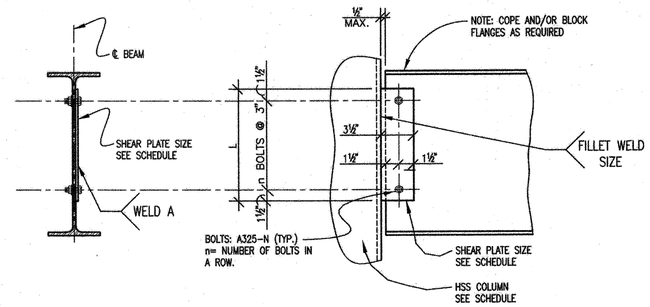

BEAM SIZE	PLATE SIZE	L in.	n	WELD (TYP.) EA. SIDE	BOLT (TYP.)
W8'S	5/16	6	2	¼	¾"
W10's	5/16	6	2	¼	¾"
W12'S	5/16	9	3	¼	¾"
W14'S	5/16	9	3	¼	¾"
W16'S	5/16	12	4	¼	¾"
W18'S	5/16	12	4	¼	¾"
W21'S	⅜	15	5	5/16	¾"
W24'S	⅜	15	5	5/16	¾"
W27'S	⅜	18	6	5/16	¾"

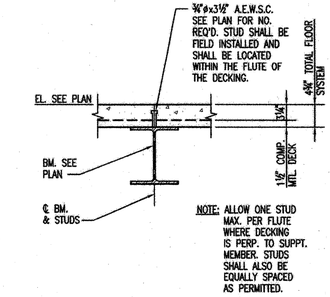

3 S4.00 SECTION–DECK SPAN PERPENDICULAR TO SUPPORTING MEMBER

¾"=1'-0"

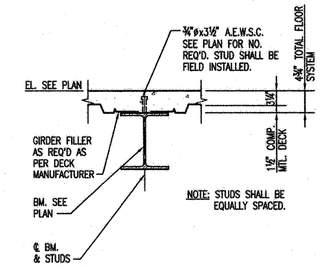

4 S4.00 SECTION–DECK SPAN PARALLEL TO MAIN GIRDERS (SINGLE ROW OF STUDS)

¾"=1'-0"

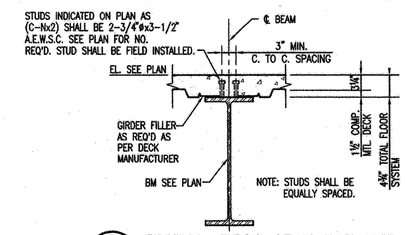

5 S4.00 SECTION–DECK SPAN PARALLEL TO MAIN GIRDERS (TWO ROWS OF STUDS)

¾"=1'-0"

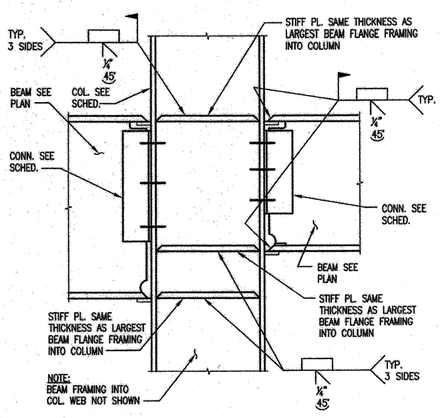

6 S4.00 MOMENT CONN. TO FLANGE

1"=1'-0"

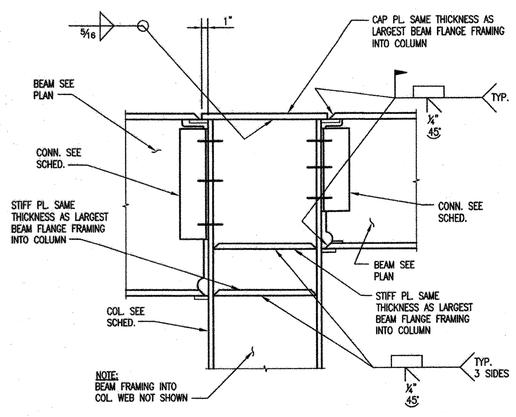

7 S4.00 MOMENT CONN. TO FLANGE TOP OF COL.

1"=1'-0"

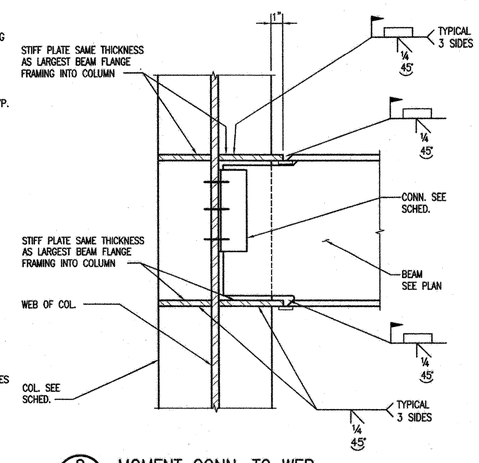

8 S4.00 MOMENT CONN. TO WEB

1"=1'-0"

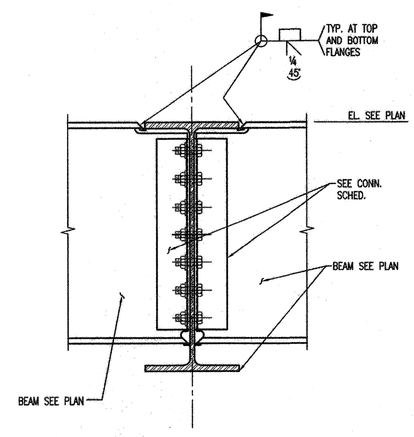

9 S4.00 DETAIL–TYPICAL BEAM TO BEAM MOMENT CONNECTION

1½"=1'-0"

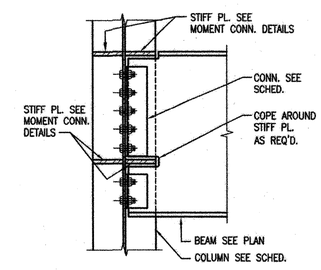

10 S3.02 DETAIL

1"=1'-0"

MORPHY MAKOFSKY INCORPORATED CONSULTING ENGINEERS (504)488-1317 JOB NO. 12053

VergesRome Architects
FANNING HOWEY A Joint Venture
320 N. Carrollton Avenue, Suite 100
New Orleans, Louisiana 70119
t. 504.488.7739 f. 504.488.7743

© copyright 2012

STATE OF LOUISIANA — DONALD C. MAKOFSKY License No. 10439 PROFESSIONAL ENGINEER IN CIVIL ENGINEERING

DEC 07 2012

NEW 3 SECTION ELEMENTARY SCHOOL AT FISK-HOWARD SCHOOL
RECOVERY SCHOOL DISTRICT

211 S. LOPEZ STREET NEW ORLEANS, LOUISIANA 70119

DATE ISSUED:	7 DECEMBER, 2012
REVISED:	
REVISED:	
REVISED:	
REVISED:	
DRAWN BY:	WFD
CHECKED BY:	JAS
PHASE:	BID DOCUMENTS

11085

TITLE: MISC. STEEL SECTIONS & DETAILS

SHEET: S4.00