FIXTURE & ACCESSORY SCHEDULE		
NO.	TYPE	QU.
1	TOILET	
2	LAVATORY	
3	42" GRAB BAR	
4	36" GRAB BAR	
5	TOILET PAPER DISPENSER	
6	HAND DRYER	
7	HAND SOAP DISPENSER	
8	MIRROR	
9	SINK	
10	FLOOR DRAIN	

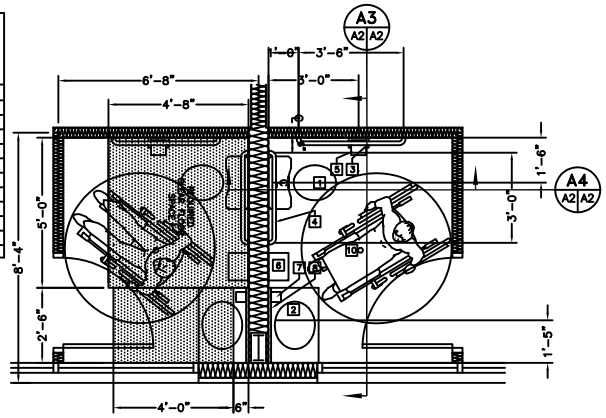

ENLARGED TYPICAL RESTROOM PLAN

SCALE: 1/2" = 1'-0"

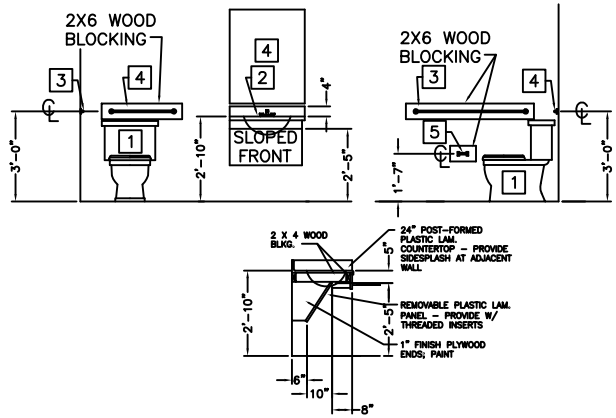

FIXTURE & ACCESSORY MOUNTING DETAILS

SCALE: 1/2" = 1'-0"

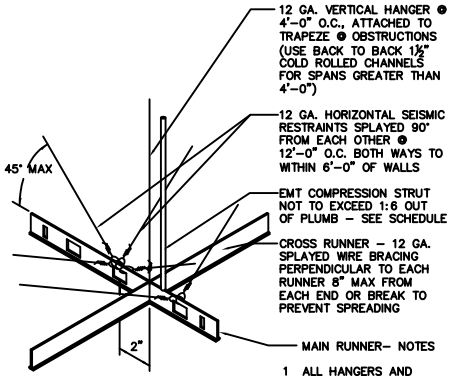

COMPRESSION STRUT SCHEDULE	
LENGTH	DIAMETER
UP TO 4'-0"	3/4"ø
5'-0"	1"ø
8'-0"	1-1/2"ø

1. ALL HANGERS AND SUPPORTS TO BE ATTACHED WITH 4 TURNS IN ½" (TYP)
2. SUPPORT EACH LIGHT FIXTURE INDEPENDENTLY OF CEILING GRID WITH (1) #12 WIRE AT TWO CORNERS DIAGONALLY ACROSS FROM ONE ANOTHER
3. ALL MAIN AND CROSS TEES- THEIR SPLICES AND INSTERSECTING CONNECTIONS SHALL BE ADEQUATE TO RESIST 72 LBS IN TENSION

SUSPENDED CEILING SUPPORT

N.T.S.

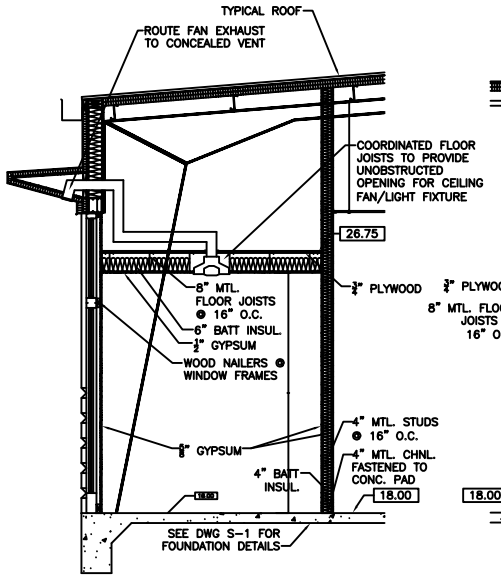

SECTION A3 (A2 A2)

SCALE: 1/2" = 1'-0"

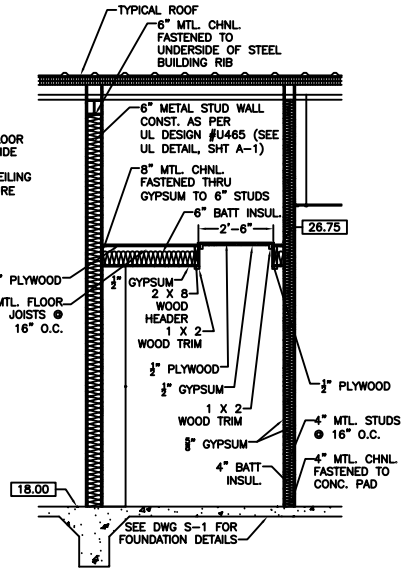

SECTION A4 (A2 A2)

SCALE: 1/2" = 1'-0"

GENERAL NOTES

HANDICAP UNITS - TOILETS SHALL COMPLY WITH THE FOLLOWING:

A. LAVATORIES SHALL BE MOUNTED WITH A CLEARANCE OF AT LEAST 29" FROM THE FINISHED FLOOR TO THE BOTTOM OF THE APRON, AND SHALL HAVE A CLEARANCE BELOW AS INDICATED IN THE DETAILS ON THIS DWG. LAVATORY RIM HEIGHT SHALL BE NOT MORE THAN 34" ABOVE FINISHED FLOOR.

B. HOT WATER AND DRAIN PIPING SHALL BE INSULATED OR COVERED.

C. FAUCETS SHALL BE HANDLE ACTIVATED.

D. MIRRORS SHALL BE MOUNTED WITH THE BOTTOM EDGE NOT MORE THAN 40" ABOVE FINISHED FLOOR.

E. HANDRAILS & GRAB BARS SHALL COMPLY WITH THE PROVISIONS OF THE AMEREICANS WITH DISABILITIES ACT.

1. GRAB BARS AT TOILET - REAR 36," 33"-36" ABOVE FINISHED FLOOR; SIDE 42," 33"-36" ABOVE FINISHED FLOOR.

F. TOILETS SHALL BE LOCATED WITH A CENTER LINE 18" FROM THE ADJACENT FINISHED WALL WITH BARS.

INSULATION AND INSULATION ASSEMBLIES SHALL MEET THE REQUIREMENTS OF SECTION 718 INTERNATIONAL BUILDING CODE, 2000 EDITION.

A. EXPOSED AND CONCEALED INSULATION SHALL HAVE A FLAME SPREAD RATING OF NOT MORE THAN 25 AND A SMOKE DEVELOPED INDEX OF NOT MORE THAN 450.

B. FACING SHALL COMPLY WITH SBC 718.2.1

PROVIDE 5' X 5' OR 5' X 10' LANDINGS OUTSIDE EXTERIOR DOORS AT FINISHED FLOOR ELEVATION. THRESHOLDS SHALL BE NOT MORE THAN ½" IN HEIGHT AND SHALL BE BEVELED IF MORE THAN ¼" IN HEIGHT. ALL GROUND AND FLOOR SURFACES SHALL BE NON-SLIP.

DIMENSIONS ARE TO CENTER LINE OF WALL STUDS OR COLUMNS.

5. CONTRACTOR TO FIELD VERIFY ALL EXISTING SITE CONDITIONS AND BUILDING LOCATIONS PRIOR TO CONSTRUCTION AND VERIFY ALL DIMENSIONS.
6. MATERIALS SHALL BE NEW AND U.L. LISTED.
7. NO WORK SHALL BE CONCEALED UNTIL APPROVED BY LOCAL INSPECTORS.
8. CONSTRUCTION SHALL COMPLY WITH ALL PARISH, STATE, AND LOCAL CODES AND REGULATIONS.
9. CONTRACTOR TO GUARANTEE WORK FOR ONE YEAR.
10. CONTRACTOR SHALL FURNISH WATER AND POWER FROM EXISTING SOURCES.
11. EXTERIOR CAULKING SHALL BE THIOKAL CAULK.
12. PAINT GRADE TO BE SHERWIN WILLIAMS OR EQUAL. ALL WORK TO RECEIVE (3) COATS. COLOR SELECTION BY OWNER.
13. PROVIDE WORK SITE CLEAN-UP ON A REGULAR BASIS. NO WORK DEBRIS TO BE STORED IN THE BUILDING.
14. ALL CONSTRUCTION DEBRIS SHALL BE DISPOSED OFF-SITE AT A PROPER AND DESIGNATED LOCATION COMPLYING WITH ALL PARISH, STATE, AND LOCAL CODES AND REGULATIONS.
15. ALL BATT INSULATION SHALL HAVE A CLASS 'B' (25-75) FLAME SPREAD RATING IN COMPLIANCE WITH APPLICABLE CODE.
16. ALL PLUMBING WALLS SHALL BE CONSTRUCTED WITH 6" STUDS UNLESS OTHERWISE NOTED.
17. PROVIDE GAL. METAL PAN WITH DRAIN AT WATER HEATER LOCATION.
18. ALL CORNERS SHALL BE PROPERLY BRACED FOR WIND LOADS. A 48" SHEATHING SHALL BE PROVIDED EVERY 20'-0" OF WALL LENGTH.
19. DOOR LOCKING DEVICES FACING PATH OF EGRESS (TYP. INTERIOR SIDE) SHALL NOT REQUIRE THE USE OF A KEY, SPECIAL DEVICE OR SPECIAL KNOWLEDGE TO OPEN IN THE DIRECTION OF EGRESS. ALL DOORS SHALL HAVE LEVER TYPE HANDLES.
20. INTERIOR WALLS AND CEILINGS SHALL HAVE A FLAME-SPREAD RATING OF 0-200 AND A SMOKE DEVELOPMENT RATING OF 0-450.
21. ALL WORK SHALL COMPLY WITH THE LATEST EDITION OF ALL LOCAL, STATE, AND NATIONAL CODES THAT COVER THAT PARTICULAR SECTION OF WORK BEING PERFORMED.
22. PROVIDE PORTABLE FIRE EXTINGUISHERS IN ACCORDANCE WITH NFPA 10. SEE APPENDIX 'E' OF NFPA 10 FOR DISTRIBUTION OF EXTINGUISHERS.
23. ALL FIRE WALLS SHALL EXTEND TIGHT TO ROOF SHEATHING & SEALED WITH APPROVED FIRE CAULK.
24. ALL ELECTRICAL, MECHANICAL, & PLUMBING PENETRATING FIRE WALLS SHALL BE FIRE CAULKED.

DETAILS

GARY MUTTER
2170 HWY. 190 WEST
SLIDELL, LOUISIANA

SLIDELL WEST SHOPPING CENTER

DAMMON ENGINEERING. INC.
1095 FLORIDA AVENUE 985-649-5532 SLIDELL, LA. 70458
DAMMONENGINEERING.COM

SCALE:AS NOTED
FILE:
JOB NO. 1700
DATE:08-17-05
SHEET
A-2
OF