SMITH® JAY R. SMITH MFG. CO.
DIVISION OF SMITH INDUSTRIES, INC.
POST OFFICE BOX 3287
MONTGOMERY, ALABAMA 36109-0287 (USA)
TEL 334-277-0520 FAX 334-272-7294 www.jrsmith.com
CUSTOMER SERVICE
MEMBER OF:

LOCATION

ROOF ACCESSORY

DOWNSPOUT NOZZLE

FUNCTION: Used as a parapet overflow or at the base of a wall where a concealed leader discharges rainwater to ground. Nozzle design diverts water away from building, eliminating wall stains. Wall flange covers rough opening and serves as anchor.

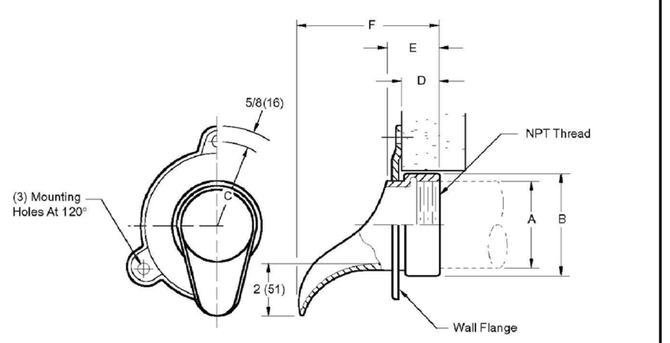

Fig. 1770T

A=PIPE	02(50)	03(75)	04(100)	05(125)	06(150)	08(200)	10(255)	12(305)
B=DIA	2 3/4 (70)	4 (100)	5 (125)	6 (150)	7 1/4 (185)	9 1/4 (235)	11 1/8 (283)	13 1/4 (335)
C=RAD	2 3/4 (70)	3 1/2 (89)	3 7/8 (98)	4 3/8 (111)	5 (125)	5 7/8 (149)	7 1/4 (185)	8 (205)
D	1 3/8 (35)	1 3/8 (35)	1 3/8 (35)	1 3/8 (35)	1 3/8 (35)	1 5/8 (41)	1 3/4 (44)	2 (51)
E	2 1/16 (52)	2 1/16 (52)	2 1/16 (52)	2 1/16 (52)	2 1/16 (52)	2 3/8 (60)	2 3/4 (70)	2 15/16 (75)
F	5 5/8 (143)	5 5/8 (143)	5 5/8 (143)	5 5/8 (143)	5 5/8 (143)	5 15/16 (149)	5 3/8 (138)	7 9/16 (192)

NOTE: Dimensions shown in parentheses are in millimeters.

REGULARLY FURNISHED:
Cast Bronze Nozzle and Flange.

VARIATIONS:
☐ Bird Screen -BS

OPTIONAL MATERIALS:
☐ Nickel Bronze -NB
☐ Polished Bronze -PB

DRAWN BY: CR | CHECKED BY: TD | APPROVED BY: JD | DATE: 2-25-85 | SCALE: NONE | SIZE: A | DRAWING NUMBER: S1770 | SHEET: F

FIGURE NUMBER: 1770

DIMENSIONS ARE SUBJECT TO MANUFACTURER'S TOLERANCE AND CHANGE WITHOUT NOTICE

WE CAN ASSUME NO RESPONSIBILITY FOR USE OF OBSOLETE OR INCORRECT DRAWINGS

REV	DATE	DESCRIPTION	BY	CKD BY
F	6-16-05	Revised Table	RN	CL
E	04/05/04	Added Bird Screen Variation	JJ CMD	CL
D	6-15-99	Revised Millimeters	CMD	BS

WEIGHT POUNDS | VOLUME CUBIC FEET | FIGURE NUMBER **1770**

SMITH® JAY R. SMITH MFG. CO.®
DIVISION OF SMITH INDUSTRIES, INC.
POST OFFICE BOX 3287
MONTGOMERY, ALABAMA 36109-0287 (USA)
TEL 334-277-0520 FAX 334-272-7294 www.jrsmith.com
CUSTOMER SERVICE
MEMBER OF:

LOCATION

SPECIAL PURPOSE ROOF DRAINS

OVERFLOW STANDPIPE TYPE

FUNCTION: Used in flat roofs of any construction where a constant height of water is desired on the roof. It is also used on conventional roofs as a safety overflow, which receives water only when the build-up is greater than the setting of the standpipe. Standpipe type water dam can be cut to achieve various water depths on the roof.

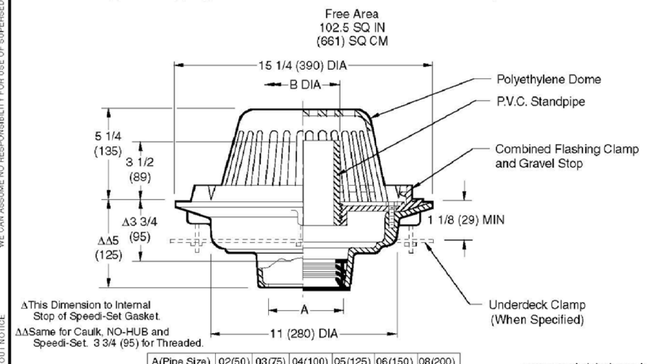

Δ This Dimension to Internal Stop of Speed-Set Gasket.
ΔΔ Same for Caulk, NO-HUB and Speed-Set. 3 3/4 (95) for Threaded

A (Pipe Size)	02(50)	03(75)	04(100)	05(125)	06(150)	08(200)
B (DIA)	4(100)	4(100)	4(100)	6(150)	6(150)	8(200)

☐ Fig. 1070C . . . . . CAULK OUTLET
☐ Fig. 1070Y . . . . . NO-HUB OUTLET

recommended deck opening

with suffix-R	17 (430) DIA
less Suffix -R	14 (355) DIA

REGULARLY FURNISHED:
Duco Cast Iron Body, Flashing Clamp and Gravel Stop with Polyethylene Dome, and P.V.C. Standpipe.

VARIATIONS:
☐ Adjustable Extension(Specify Fig. 1045)
☐ Expansion Joint (Specify Fig. 1710)
☐ Extension (Specify Height) -E
☐ "L" Shaped Underdeck Clamp -CL
☐ L Speedi-Set Service Weight 02(50), 03(75) & 04(100) sizes only
☐ LXH Speedi-Set Extra Heavy 02(50), 03(75) & 04(100) sizes only
☐ Secondary Flashing Clamp -C2
☐ Sump Receiver -R
☐ Underdeck Clamp -C
☐ Vandal Proof Dome -U
☐ T Threaded Outlet

OPTIONAL MATERIALS:
☐ Aluminum Dome -AD
☐ Bronze Standpipe -BZS
☐ Cast Iron Dome -CID
☐ Cast Iron Standpipe -CIS
☐ Galvanized Cast Iron Body and Collar -G
☐ Galvanized Cast Iron Dome -CIDG
☐ Rough Bronze Dome -RBD

NOTE: Dimensions shown in parentheses are in millimeters.

DRAWN BY: CR | CHECKED BY: TD | APPROVED BY: TD | DATE: 5-24-85 | SCALE: NONE | SIZE: A | DRAWING NUMBER: S1070 | SHEET: P

FIGURE NUMBER: 1070

DIMENSIONS ARE SUBJECT TO MANUFACTURER'S TOLERANCE AND CHANGE WITHOUT NOTICE

WE CAN ASSUME NO RESPONSIBILITY FOR USE OF OBSOLETE OR INCORRECT DRAWINGS

REV	DATE	DESCRIPTION	BY	CKD BY
P	3-6-07	Revised Chart	RN	TK
N	07/20/05	Revised Varistions	JJ CMD	CL
M	5-26-99	Revised Opt. Mat.	CMD	BS
L	1-24-97	Revised	CMD	BS

WEIGHT POUNDS | VOLUME CUBIC FEET | FIGURE NUMBER **1070**

SMITH® JAY R. SMITH MFG. CO.®
DIVISION OF SMITH INDUSTRIES, INC.
POST OFFICE BOX 3287
MONTGOMERY, ALABAMA 36109-0287 (USA)
TEL 334-277-0520 FAX 334-272-7294 www.jrsmith.com
CUSTOMER SERVICE
MEMBER OF:

LOCATION

LARGE GENERAL PURPOSE ROOF DRAINS

LOW PROFILE DOME

FUNCTION: Used in flat roof of any construction. Large low profile dome provides sufficient free area for quick drainage of rain water and protects the drain sump and connected piping from the intrusion of debris. Wide clamping surface holds flashing and roofing materials without puncturing.

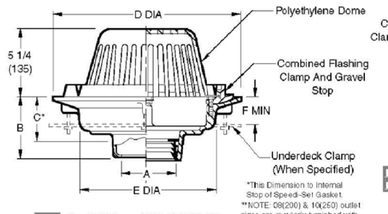

*This Dimension to Internal Stop of Speed-Set Gasket.
**NOTE: 08(200) & 10(255) outlet sizes are regularly furnished with 225/19 dia flange. If 8/4(435) dia flange is required - 16 MUST be specified.
Ex: 10H0108-16 or 12H0110-16

Fig. 1010C . . . . CAULK OUTLET
Fig. 1010Y . . . . NO-HUB OUTLET

☐ Fig. 1020C 02(50), 03(75) & 04(100)" CAULK OUTLET
☐ Fig. 1020T 02(50), 03(75) & 04(100)" THREADED OUTLET

☐ Fig. 1020C 05(125) & 06"(150) CAULK OUTLET
☐ Fig. 1020T 05(125) & 06"(150) THREADED OUTLET

recommended deck opening

outlet size	with suffix-R	less suffix-R
02(50),03(75),04(100) 05(125),06(150)	17(430) DIA	14(355) DIA
**08(200)-16, **10x(250)-16	17(430) DIA	14 3/4 (375) DIA
**08(200), **10(250)	21(535) DIA	18 3/4(475) DIA

# SIZE	B (BOTTOM OUTLET) CAULK, NO-HUB & SPEED-SET	THREADED	C	D DIA	E DIA	F MIN	SIDE OUTLET G	H	J	FREE AREA SQ IN (SQ CM)
02(50),03(75)	4 (100)	3 3/4 (95)	5 3/4 (146)	8 1/4 (210)	11 1/8 (283)	5 1/8 (130)	4 3/4 (120)	6 (152)	7 5/8 (194)	102.5 (661)
04(100)	4 (100)	3 3/4 (95)	6 (152)	8 1/4 (210)	11 1/8 (283)	5 1/8 (130)	5 1/4 (133)	6 7/8 (175)	7 5/8 (194)	102.5 (661)
05(125),06(150)	6 (150)	5 3/4 (146)	-	11 1/4 (286)	14 1/4 (362)	5 1/8 (130)	6 1/2 (165)	8 1/2 (216)	7 5/8 (194)	332.5(2145)
**08(200)-16	6 (150)	7 3/4 (197)	-	16 (406)	19 1/2 (495)	-	-	-	-	332.5(2145)
**08(200), **10(250)	7 (178)	7 3/4 (197)	-	20 (510)	23 1/2 (597)	5 1/8 (130)	6 1/4 (159)	8 1/2 (216)	7 5/8 (194)	229 (1477)

(SIDE OUTLET)

# SIZE	02 (50)	03 (75)	04 (100)	05 (125)	06 (150)
B	4 7/8 (125)	6 3/8 (162)	6 7/8 (175)	8 (203)	9 (229)
C	6 5/8 (168)	8 3/4 (222)	8 3/4 (222)	9 1/2 (241)	9 1/2 (241)

REGULARLY FURNISHED:
Duco Cast Iron Body with Combined Flashing Clamp and Gravel Stop with Polyethylene Dome.

VARIATIONS:
☐ Expansion Joint (Specify Fig.1710) (Fig. 1010 only)
☐ Extension (Specify Height) -E
☐ "L" Shaped Underdeck Clamp -CL
☐ L Speedi-Set Service Weight 02(50), 03(75), and 04(100)" sizes only (Fig. 1010 only)
☐ LXH Speedi-Set Extra Heavy 02(50), 03(75), and 04(100)" sizes only (Fig. 1010 only)
☐ NO-HUB Adaptor (Specify Fig. 2646Y) (Fig. 1020 only)
☐ Secondary Flashing Clamp -C2
☐ Sump Receiver -R
☐ Underdeck Clamp -C
☐ Vandal Proof Dome -U
☐ T Threaded Outlet

OPTIONAL MATERIALS:
☐ All Aluminum -AA (Fig. 1010 only)
☐ Aluminum Dome -AD
☐ Cast Iron Dome -CID
☐ Galvanized Cast Iron Dome -CIDG
☐ Galvanized Cast Iron Body & Collar -G
☐ Rough Bronze Dome -RBD
☐ Stainless Steel (Specify Fig. 9789)

NOTE: Dimensions shown in parentheses are in millimeters.

DRAWN BY: CR | CHECKED BY: TD | APPROVED BY: TD | DATE: 5-24-85 | SCALE: NONE | SIZE: A | DRAWING NUMBER: S1010 | SHEET: O

FIGURE NUMBER: 1010, 1020

DIMENSIONS ARE SUBJECT TO MANUFACTURER'S TOLERANCE AND CHANGE WITHOUT NOTICE

WE CAN ASSUME NO RESPONSIBILITY FOR USE OF OBSOLETE OR INCORRECT DRAWINGS

REV	DATE	DESCRIPTION	BY	CKD BY
O	07-09-07	Corrected Free Area	JJ TBW	CL JM
S	9-7-06	Corrected Free Area		

WEIGHT POUNDS | VOLUME CUBIC FEET | FIGURE NUMBER **1010, 1020**

DAMMON ENGINEERING, INC.
1095 FLORIDA AVE.
SLIDELL, LA 70458
OFFICE: (985) 649-5832
FAX: (985) 641-5950
WEBSITE: WWW.DAMMONENGINEERING.COM
EMAIL: DAMMONENG@BELLSOUTH.NET

ROWLETT PLAZA
ROWLETT, TEXAS

ZITO·RUSSELL
ARCHITECTS, P.C.
820 S. UNIVERSITY BLVD. SUITE 2G
PHONE (251) 343-6161
MOBILE, AL 36609
FAX (251) 343-0505

© COPYRIGHT 2008
ZITO – RUSSELL
ARCHITECTS, P.C.

REVISIONS

STATE OF TEXAS
EMMETT G. DAMMON, JR.
95558
LICENSED
PROFESSIONAL ENGINEER
5/27/08

FILE
DATE
SHEET

M-3