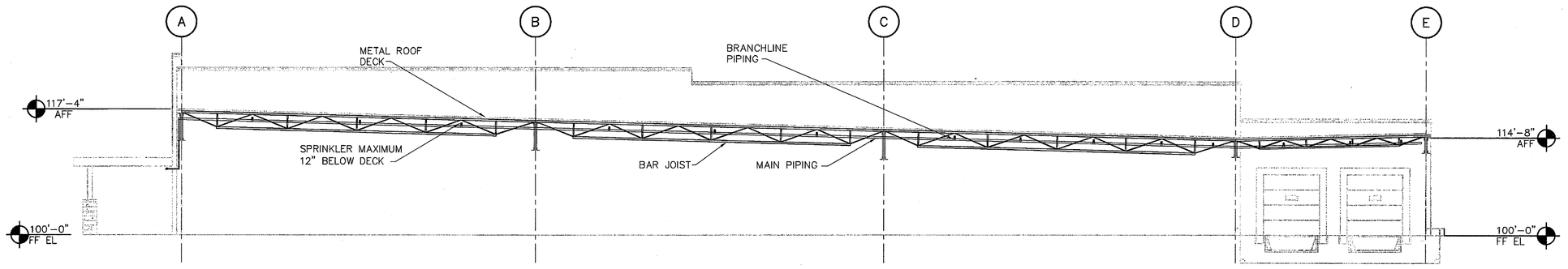

4 SECTION ELEVATION
NTS

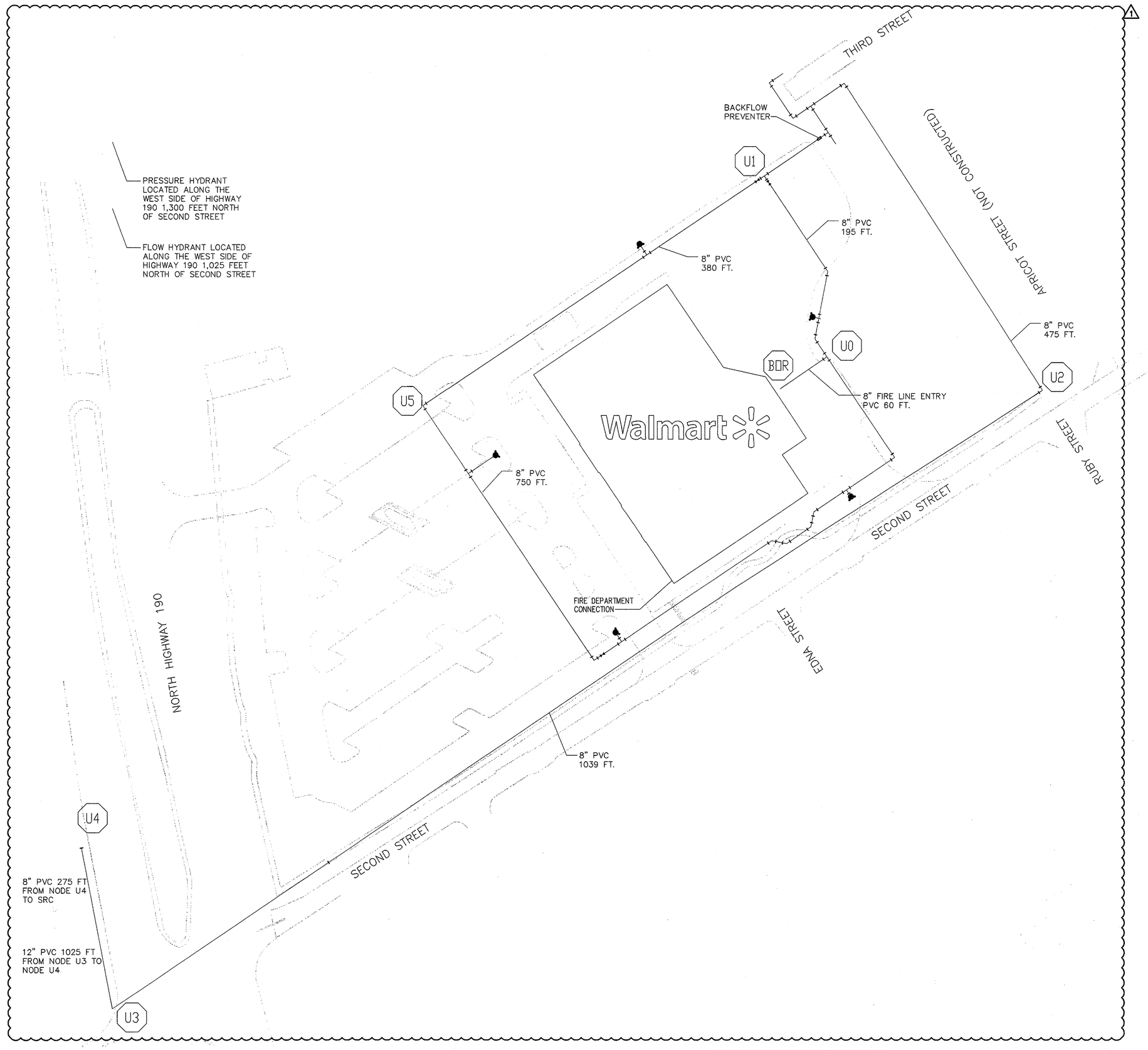

1 FIRE SITE UTILITY PLAN
1" = 50'-0"

0 25 50 100

UNDERGROUND PIPING SHOWN FOR HYDRAULIC CALCULATION PURPOSES ONLY. REFER TO CIVIL DOCUMENTS FOR ADDITIONAL INFORMATION.

CONTACT INFORMATION

DOCUMENTS INCLUDE JURISDICTIONAL REQUIREMENTS PROVIDED BY THE FOLLOWING CONTACTS:

FIRE SPRINKLER REVIEWING AUTHORITY:
KEN PHALJI, REVIEW ENGINEER
(225) 925-4920

CROSS CONNECTION CONTROL AUTHORITY:
DELOS WILLIAMS, REGIONAL DIRECTOR
(985) 893-6646 EXT. 2

WATER SUPPLY INFORMATION

TEST STATIC AT SRC: 65.0 PSI
TEST RESIDUAL AT SRC: 48.0 PSI AT 1061 GPM

INFORMATION DERIVED FROM A WATER REPORT SUPPLIED BY TELGIAN CORPORATION DURING A FLOW TEST VISIT ON 9/13/11. THE TEST WAS CONDUCTED AT 11:35 AM CDT AND WITNESSED BY SHANE JENKINS, JOHN CARBONI AND CORY PRICE, COVINGTON FIRE DEPARTMENT.

FLOW TEST ELEVATION: 15.0 FT AMSL
BUILDING PAD ELEVATION: 25.25 FT AMSL

THE WATER SUPPLY IS MODIFIED BY THE FOLLOWING:

- 4.4 PSI DUE TO ELEVATION DIFFERENCE BETWEEN TEST AND BUILDING

DESIGN STATIC AT SRC: 60.6 PSI
DESIGN RESIDUAL AT SRC: 43.6 PSI AT 1061 GPM

3.0 PSI STATIC AND 3.5 PSI RESIDUAL PRESSURE LOSSES DUE TO AN 8" WILKINS 350A BACKFLOW PREVENTER ARE NOT INCLUDED. ADDITIONAL 5.0 PSI SAFETY FACTOR IS NOT INCLUDED.

APPLICABLE CODES

NFPA STANDARDS	EDITION
NFPA 13	2007

REFER TO SHEET C1 FOR APPLICABLE BUILDING CODES

GENERAL UNDERGROUND NOTES

1. INSTALLATION AND MATERIAL TO BE PER NFPA 24, PIPING UNDER FOOTINGS TO BE DUCTILE IRON.
2. PIPING AND ATTACHED APPURTENANCES SUBJECTED TO SYSTEM WORKING PRESSURE SHALL BE HYDROSTATICALLY TESTED AT 200 PSI OR 50 PSI IN EXCESS OF THE SYSTEM WORKING PRESSURE, WHICHEVER IS GREATER, AND SHALL MAINTAIN THAT PRESSURE WITHOUT LOSS FOR TWO HOURS.
3. UNDERGROUND PIPE TO BE FLUSHED PRIOR TO CONNECTION TO OVERHEAD SPRINKLER PIPING. IT IS THE RESPONSIBILITY OF THE CONTRACTOR TO ENSURE THAT FLUSHING OF THE UNDERGROUND PIPING HAS OCCURRED PRIOR TO CONNECTION.
4. PROVIDE CONCRETE THRUST BLOCKING AND THRUST RODS AS REQUIRED BY NFPA 24.
5. UNDERGROUND PIPING MUST BE INSTALLED BY A CONTRACTOR LICENSED, WITH THE AUTHORITY HAVING JURISDICTION. ALL TESTING MUST BE COMPLETED IN ACCORDANCE WITH NFPA 13, NFPA 24, AND NFPA 25. ALL COMPLETED REPORTS MUST BE SUBMITTED TO THE AUTHORITY HAVING JURISDICTION, AND STORED ON SITE FOR PRESENTATION DURING SITE OBSERVATION.

FIRE DEPARTMENT CONNECTION NOTES

1. THE FIRE DEPARTMENT CONNECTION SHALL BE LOCATED WHERE SHOWN ON THE FIRE PROTECTION DRAWINGS IN AN ACCESSIBLE LOCATION.
2. THE FIRE DEPARTMENT CONNECTION SHALL BE INSTALLED AT A MINIMUM OF 18" AND A MAXIMUM OF 42" ABOVE THE SURROUNDING GRADE.
3. THE FIRE DEPARTMENT CONNECTION SHALL MINIMALLY CONSIST OF TWO 2 1/2" INLETS WITH NATIONAL STANDARD THREADS.
4. THE SUPPLY LINE FROM THE FIRE DEPARTMENT CONNECTION TO THE RISER MANIFOLD SHALL BE A MINIMUM OF 6" DIA PIPE.
5. PROVIDE A FIRE HYDRANT WITHIN 150'-0" OF THE FIRE DEPARTMENT CONNECTION.
6. PROVIDE AN ELECTRIC BELL ON EXTERIOR WALL ABOVE THE FIRE DEPARTMENT CONNECTION, THIS DEVICE SHALL ACTIVATE ON WATERFLOW ONLY.
7. PROVIDE SIGNAGE AT FIRE DEPARTMENT CONNECTION AS REQUIRED BY NFPA 13.

GENERAL NOTES

1. THE DESIGN SHOWN ON THESE CONTRACT DOCUMENTS HAS BEEN PREPARED FOR APPROVAL BY THE AUTHORITY HAVING JURISDICTION AND TO PROVIDE GUIDANCE FOR BIDDING. THE CONTRACTOR SHALL SUBMIT COMPLETE FIRE SPRINKLER SHOP DRAWINGS AS REQUIRED BY SPECIFICATION SECTION 01330. CONTRACTOR SHALL BASE SHOP DRAWING DESIGN ON THE FIRE PROTECTION DRAWINGS AND SPECIFICATIONS. SPRINKLER SHOP DRAWINGS SHALL INCLUDE ALL NECESSARY ELEVATIONS, HANGER LOCATIONS, PIPE LENGTHS, DIMENSIONS, FABRICATION METHODS/NOTES, MATERIAL DATA, AND ANY OTHER INFORMATION NECESSARY TO CLARIFY THE INTENT OF INSTALLATION. CONTRACTOR SHALL PROVIDE PIPE SIZES, SPRINKLER SPACING, AND ALL SYSTEM CONFIGURATIONS AS SHOWN. ANY ALTERNATES IN DESIGN OF THE SYSTEM OR IN MATERIALS OR EQUIPMENT USED MUST BE APPROVED IN WRITING VIA THE REQUEST FOR INFORMATION PROCESS BY THE FIRE PROTECTION ENGINEER OF RECORD PRIOR TO ANY BIDDING, FABRICATION, OR INSTALLATION.
2. CONTRACTOR SHALL COORDINATE LOCATIONS OF FIRE PROTECTION COMPONENTS INCLUDING PIPING, ALARMS, DRAINS, TEST POINTS, ETC., WITH ALL ARCHITECTURAL, STRUCTURAL, MECHANICAL, AND ELECTRICAL COMPONENTS. OBSTRUCTIONS TO SPRINKLER DISCHARGE MUST BE CONSIDERED DURING SHOP DRAWING PRODUCTION AND INSTALLATION. EXTRA SPRINKLERS MAY BE REQUIRED AT NO ADDITIONAL COST TO WAL-MART. REFER TO SPECIFICATION FOR ADDITIONAL REQUIREMENTS.
3. SUBMIT A REQUEST FOR INFORMATION (RFI), FOR QUESTIONS RELATED TO THE FIRE PROTECTION DOCUMENTS.
4. ROUTE ALL SPRINKLER MAINS ABOVE THE BOTTOM CHORD OF THE BAR JOISTS.
5. SPRINKLER SYSTEMS WILL BE MONITORED BY AN OFF-SITE CENTRAL STATION INCLUDING TAMPER SWITCHES ON ALL CONTROL VALVES AND FLOW SWITCHES.
6. IF APPLICABLE, THE CONTRACTOR SHALL ASSUME THAT ANY CURTAIN BOARDS OR DRAFT CURTAINS WILL BE INSTALLED PRIOR TO THE SPRINKLER PIPING. CONTRACTOR SHALL BE RESPONSIBLE FOR PROPER PENETRATIONS OF THE CURTAIN BOARDS OR DRAFT CURTAINS AND SEALING WITH APPROVED FIRE CAULKING.
7. PENETRATIONS OF RATED WALLS OR ASSEMBLIES SHALL BE "FIRE CAULKED" WITH APPROVED CAULKING PER METHODS REQUIRED BY THE AUTHORITY HAVING JURSDICTION, AND PROJECT SPECIFICATIONS.
8. THE FIRE PROTECTION ENGINEER OF RECORD WILL NOT BE RESPONSIBLE FOR THE CONTRACTOR'S FAILURE TO CARRY OUT THE CONSTRUCTION WORK IN ACCORDANCE WITH THE CONTRACT DOCUMENTS, NOR SHALL THEY BE REQUIRED TO SUPERVISE THE CONDUCT OF THE WORK. THE CONSTRUCTION PROCEDURES AS SET FORTH BY THE GENERAL CONTRACTOR, SUB-CONTRACTORS, THEIR RESPECTIVE EMPLOYEES, OR ANY OTHER PERSON AT THE JOBSITE OTHER THAN THE ENGINEERING FIRM'S OWN EMPLOYEES.
9. SPRINKLER PROTECTION IS REQUIRED ABOVE THE ELECTRICAL ROOMS. NO MAIN PIPING SHALL PENETRATE OR PASS ABOVE THE ELECTRICAL ROOMS.
10. THE CONTRACTOR MUST REVIEW ALL CONSTRUCTION DOCUMENTS PRIOR TO BID. SHOULD MODIFICATION TO THESE PLANS BECOME NECESSARY TO PROPERLY COORDINATE THE SYSTEM WITH, OTHER TRADES, IT WILL BE THE CONTRACTOR'S RESPONSIBILITY TO OBTAIN APPROVAL OF THESE CHANGES BY THE AHJ, AND THE FIRE PROTECTION ENGINEER OF RECORD. IN ADDITION TO OBTAINING THE NECESSARY APPROVALS, THE CONTRACTOR MUST MAKE NOTE OF ALL FIELD OR COORDINATION CHANGES ON THE INSTALLATION DRAWINGS. ONCE COMPLETE, THE CONTRACTOR SHALL SUPPLY ONE COPY OF AS-BUILT DRAWINGS TO THE FIRE PROTECTION ENGINEER OF RECORD FOR THEIR USE.
11. THE CONTRACTOR SHALL DIVERT ALL DRAIN AND INSPECTORS TEST CONNECTION DISCHARGE AWAY FROM FINISHED SURFACES AND PIPE TO APPROVED DRAIN LOCATIONS. THE CONTRACTOR WILL BE BACKCHARGED FOR ANY REPAIR, REPLACEMENT, OR CLEANING OF RUST STAINS ON PAVEMENT/CONCRETE DUE TO WATER DISCHARGE FROM SPRINKLER SYSTEM DRAIN DOWNS.
12. ALL HANGER CONNECTIONS SHALL BE MADE TO THE TOP CHORD OF STRUCTURAL JOIST UNLESS NOTED OTHERWISE. USE OF SAMMY SCREWS INTO ROOF DECK OR STRUCTURE IS PROHIBITED UNLESS OTHERWISE NOTED.

PIPE TABLE (WET)

PRODUCT	NOMINAL PIPE SIZE	INSIDE DIAMETER
DYNA-FLOW	2"	2.203
DYNA-FLOW	2½"	2.703
DYNA-FLOW	3"	3.314
DYNA-FLOW	4"	4.310
DYNA-THREAD	1"	1.080
DYNA-THREAD	1¼"	1.408
DYNA-THREAD	1½"	1.639
DYNA-THREAD	2"	2.104
SCHEDULE 10	2"	2.157
SCHEDULE 10	2½"	2.635
SCHEDULE 10	3"	3.260
SCHEDULE 10	4"	4.260
SCHEDULE 10	6"	6.357
SCHEDULE 10	8"	8.249
SCHEDULE 40	1"	1.049
SCHEDULE 40	1¼"	1.380
SCHEDULE 40	1½"	1.610
SCHEDULE 40	2"	2.067

PIPE TABLE (UNDERGROUND)

PRODUCT	NOMINAL PIPE SIZE	INSIDE DIAMETER
DI	6"	6.28
DI	8"	8.39
DI	10"	10.40
DI	12"	12.46
DI	16"	16.53
DI	18"	18.61
DI	20"	20.69
DI	24"	24.85
PVC	6"	6.09
PVC	8"	7.98
PVC	10"	9.79
PVC	12"	11.65
PVC	16"	15.53
PVC	18"	17.20
PVC	20"	19.06
PVC	24"	22.76

PIPE SIZES SHOWN ARE FOR HYDRAULIC CALCULATIONS PURPOSES ONLY. REFER TO SPECIFICATIONS FOR ALLOWABLE SUBSTITUTIONS.

3 PIPE DIMENSION TABLE
NTS 10.30.07 F

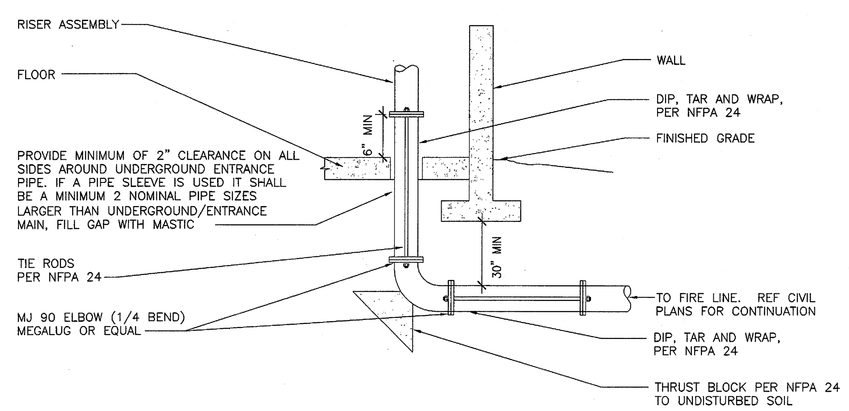

2 FIRE LEAD-IN
NTS 10.30.07 F22-1

ANY FIRE SPRINKLER SYSTEM UNDERGROUND PIPING (SITE MAIN, FIRE PUMP SUPPLY / DISCHARGE AND FIRE DEPARTMENT CONNECTION PIPING) THAT IS INSTALLED BY ANY CONTRACTOR (PARTICULARLY SITE, PLUMBING OR FIRE SPRINKLER) THAT STUBS UP INSIDE OR OUTSIDE A BUILDING OR FIRE PUMP ROOM, ESPECIALLY THROUGH A CONCRETE SLAB SHALL HAVE THE FINAL POINT OF CONNECTION FLANGE INSTALLED WITH THE "2 – HOLE METHOD". THIS FLANGE SHALL BE INSTALLED ABOVE THE FINISH GRADE / FLOOR IN EACH CASE SO THE BOLT HOLES ARE ALIGNED SO THAT FITTINGS, VALVES AND EQUIPMENT MAY BE BOLTED TO THESE FLANGES IN A MANNER THAT RESULTS IN A SQUARE ALIGNMENT WITH THE ADJACENT WALLS AND FLOOR.

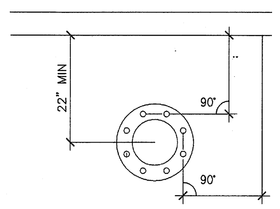

SHEET INDEX

FP1	FIRE SITE UTILITY PLAN
FP2	OVERALL FIRE SPRINKLER PLAN
FP3	FIRE PROTECTION DETAILS

STIPULATION FOR REUSE
THESE DRAWINGS AND SPECIFICATIONS ARE AS AN INSTRUMENT OF SERVICE IS THE PROPERTY OF HENDERSON ENGINEERS AND WITH ITS TITLE DATE ON 09/28/11 IS A DEFINITIVE PROJECT. IT IS NOT A DEFINITIVE PROJECT IF IT IS NOT WITH ITS TITLE DATE ON 09/28/11 FOR REFERENCE OF EXAMPLE ONLY. THE REUSE OF THESE DRAWINGS AND SPECIFICATIONS WITHOUT WRITTEN AGREEMENT OF HENDERSON ENGINEERS IS NOT AUTHORIZED. ANY UNAUTHORIZED REUSE OF AND/OR WORK PRODUCTS IS NOT ENDORSED BY HENDERSON AND MAY BE CONTRARY TO THE LAW.

CONSULTANTS
HENDERSON ENGINEERS
8601 RED OAK BLVD.
CHARLOTTE, NC 28217
TEL 704.357.8009 FAX 704.357.8051
www.henderson.com
LA CORPORATE REGISTRY: 2584

Walmart's Market
COVINGTON, LA
STORE NO. 3042-00
JOB NUMBER: 97120128 PROTO: 41

ISSUE BLOCK

1	11/11/11	REV #1

CHECKED BY:	SRO
DRAWN BY:	JMP
FILE NAME:	FP1
PROTO CYCLE:	072911
DOCUMENT DATE:	092111

STATE OF LOUISIANA
DARRELL E. STEIN II
License No. 32421
PROFESSIONAL ENGINEER
IN FIRE PROTECTION
11-9-11

FIRE SITE UTILITY PLAN

SHEET: FP1

DARRELL E. STEIN