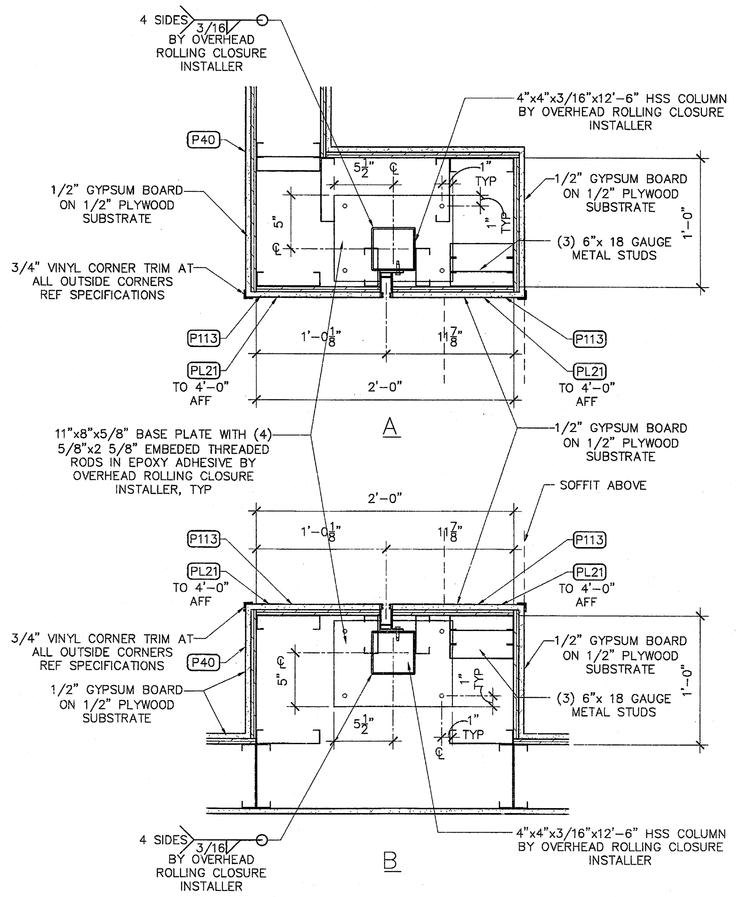

9 ROLLING DOOR GUIDE AND COLUMN
1 1/2" = 1'-0" 052711 PH/PH010-009_32MKT-F

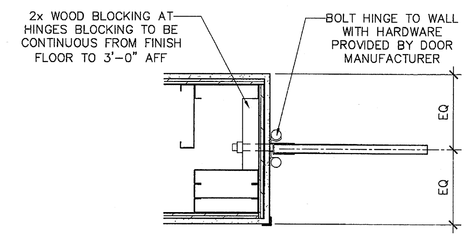

6 CAFE DOOR HINGE
1 1/2" = 1'-0" 052711 PH/PH010-010_32MKT-F

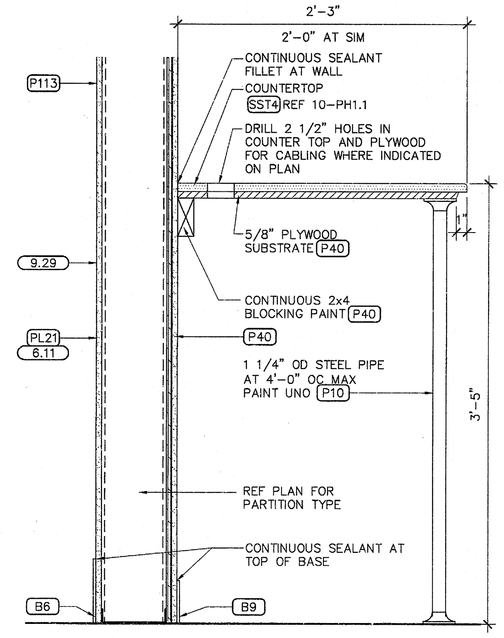

8 SECTION AT COUNTER
1 1/2" = 1'-0" 072911 PH/PH010-008_32MKT

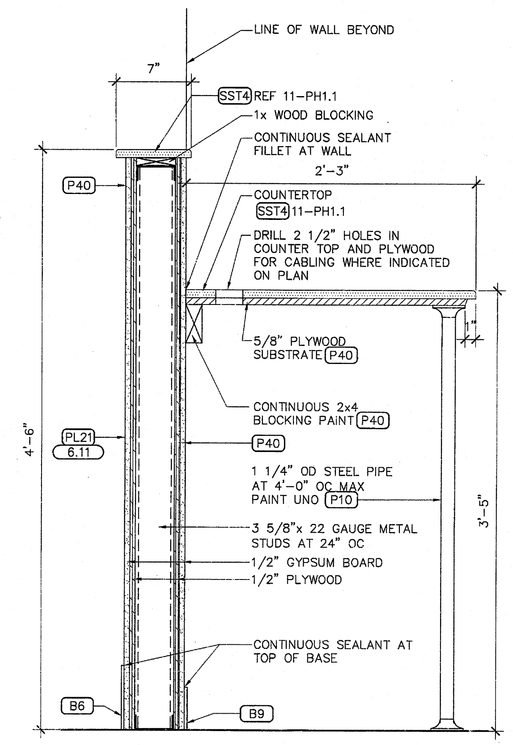

7 SECTION AT KNEEWALL
1 1/2" = 1'-0" 072911 PH/PH010-007_32MKT

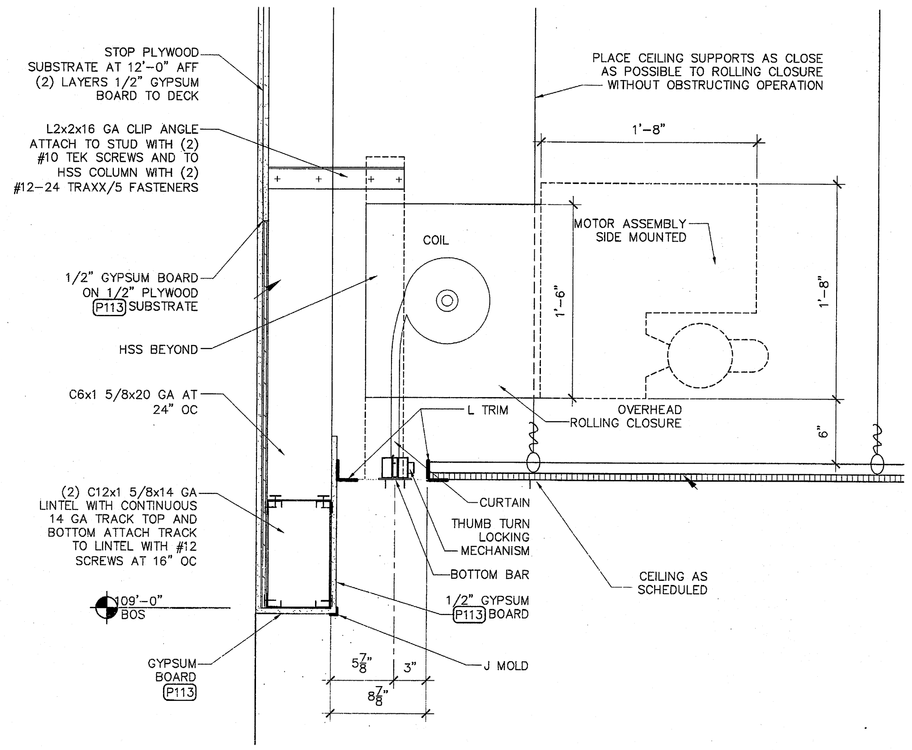

5 COILING DOOR SECTION
1 1/2" =1'-0" 052711 PH/PH010-005_32MKT-F

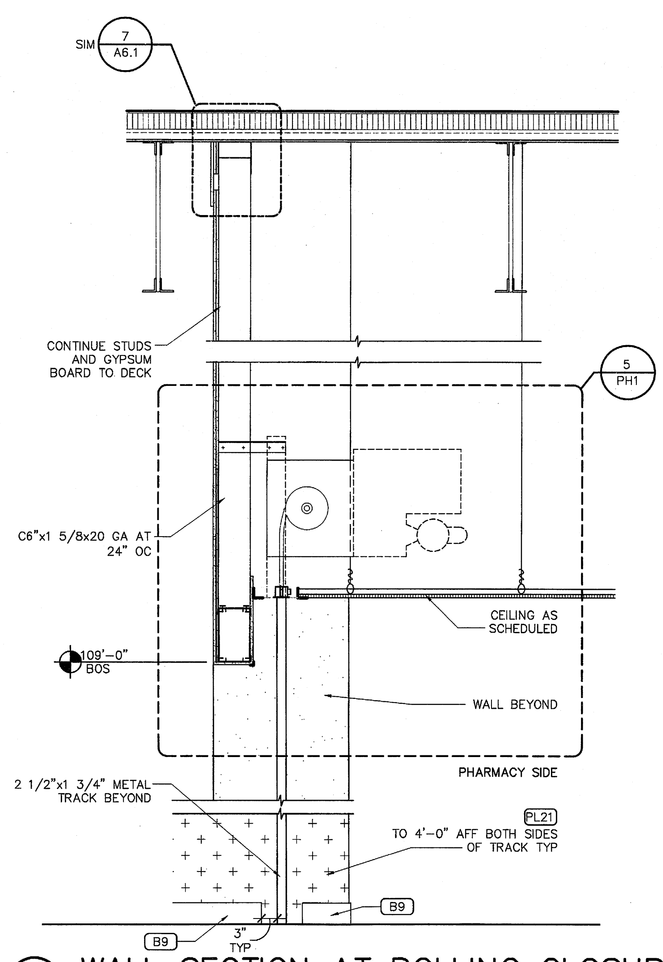

4 WALL SECTION AT ROLLING CLOSURE
3/4" = 1'-0" 052711 PH/PH010-004_32MKT-F

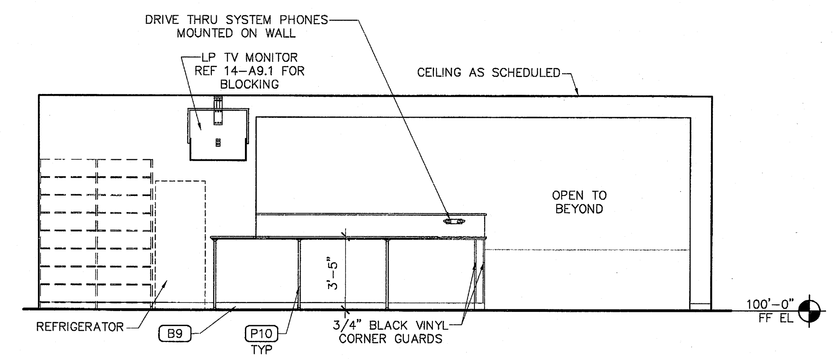

3 PHARMACY INTERIOR ELEVATION
1/4" = 1'-0" 072911 PH/PH010-003_32MKT-F

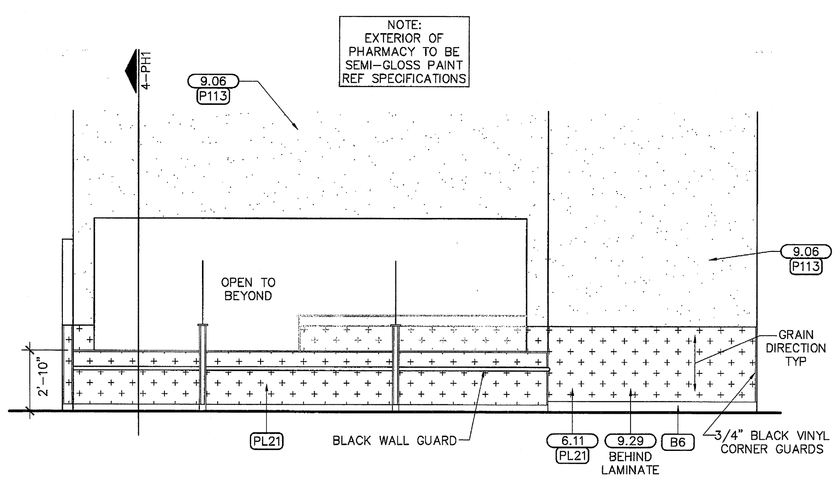

2 PHARMACY EXTERIOR ELEVATION
1/4" = 1'-0" 072911 PH\PH010-002_32MKT-F

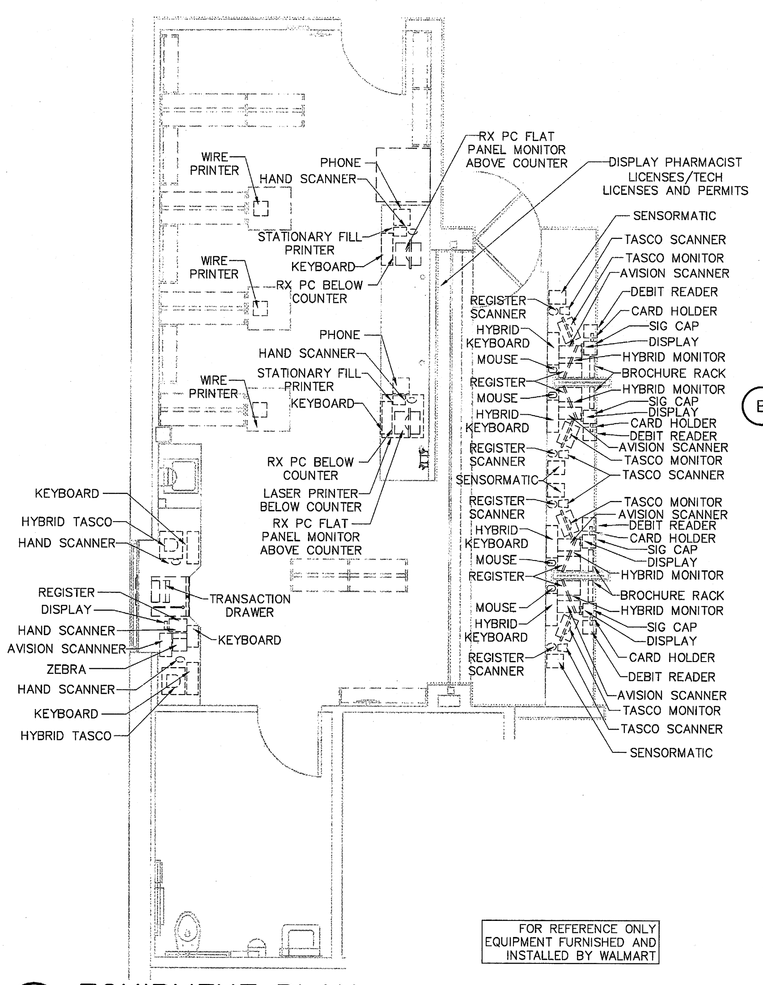

1A EQUIPMENT PLAN
1/4"=1'-0" 052711 PH/PH010-001A_32MKT-F

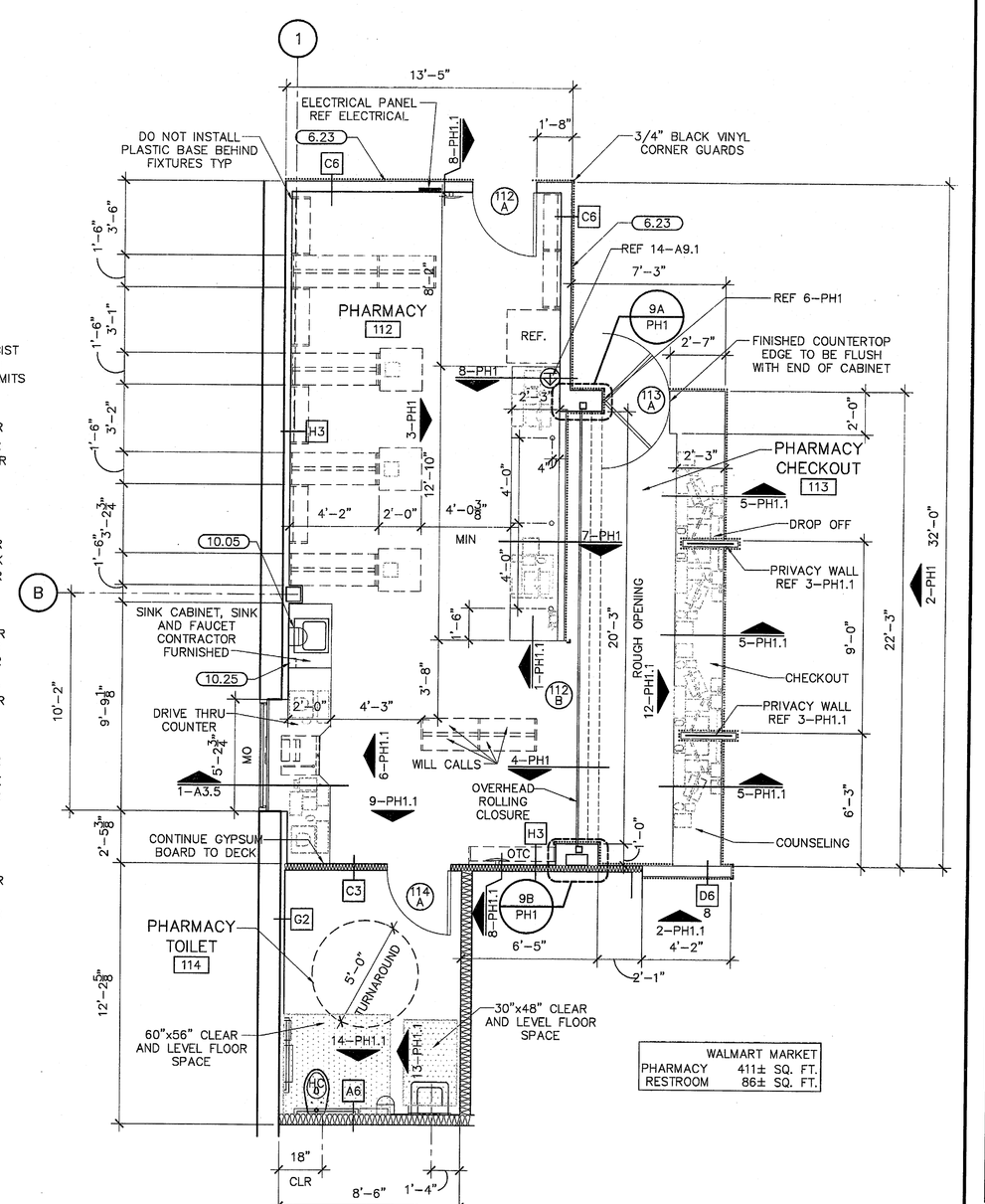

1 PHARMACY PLAN
1/4"=1'-0" 072911 PH/PH010-001_32MKT-F

072911 PH/PH010-GNOTES_32MKT

SHEET NOTES

1. INTERIOR PLAN DIMENSIONS SHALL BE TO FACE OF STUD/CMU UNLESS NOTED OTHERWISE
2. SUPPORT COUNTERTOPS WITH TEMPORARY 2x4 LEGS UNTIL BASE CABINETS ARE INSTALLED. THEN INSTALL PERMANENT 1 1/4" DIAMETER PIPE SUPPORT LEGS AT OPEN SPANS.
3. COUNTERTOPS SHALL BE SST4
4. INSTALL MIRRORS PER MANUFACTURERS SPECIFICATIONS.
5. PAINT ALL EXPOSED CONDUIT TO MATCH ADJACENT WALLS
6. REF SHEET A7 FOR FINISH LEGEND.
7. WAL-MART FURNISHED AND INSTALLED ITEMS SHOWN DASHED UNO.

052711 PH/PH010-KNOTES_32MKT

KEYNOTES

6.11	48" HIGH PLASTIC LAMINATE WITH ALUMINUM METAL EDGE TRIM AT EXPOSED EDGES
6.23	PROVIDE 2x4 CONTINUOUS HORIZONTAL WOOD BLOCKING AT 6'-0" AFF FULL LENGTH OF INDICATED WALL
9.06	1/2" GYPSUM BOARD
9.29	1/2" IMPACT RESISTANT GYPSUM BOARD TO 48" AFF
10.05	PAPER TOWEL DISPENSER (SURFACE MOUNTED) NIC
10.25	WALL MOUNTED SOAP DISPENSER

B|R|R architecture
ARCHITECT OF RECORD: BRR ARCHITECTURE, INC.
6700 ANTOINE ROAD, SUITE 300, HOUSTON, TEXAS 77091

STIPULATION FOR REUSE
THIS DRAWING WAS PREPARED FOR CONSTRUCTION IN WALMART STORES, INC. OR SAM'S CLUB. THE CONTENT OF THIS DRAWING IS THE PROPERTY OF WALMART STORES, INC. AND IT IS NOT SUITABLE FOR USE ON OTHER PROJECTS. THE REPRODUCTION OF THIS DRAWING FOR USE ON OTHER PROJECTS, OR FOR ANY OTHER PURPOSE OTHER THAN THE SERVICES OF PROVIDING EXISTING CONDITIONS OR PROPOSED IMPROVEMENTS TO WALMART STORES, INC. IS PROHIBITED. ANY REPRODUCTION NOT AUTHORIZED AND MAY BE CONTRARY TO THE LAW.

CONSULTANTS

Walmart:$:
Market
COVINGTON, LA
STORE NO.3042-00
JOB NUMBER: 97120128 PROTO: 41

ISSUE BLOCK

CHECKED BY:	AH
DRAWN BY:	GC
FILE NAME:	
PROTO CYCLE:	072911
DOCUMENT DATE:	092111

RICHARD A. MAJOR, JR. REG. NO. 0840 STATE OF LOUISIANA REGISTERED ARCHITECT
9/20/11

PHARMACY

SHEET: PH1

BRR ORIGINAL PRINTED ON RECYCLED PAPER

7/25/2011 11:40:45 AM Grazia Casco